GLR-Series Gearless Machine Instruction Manual (#1198)

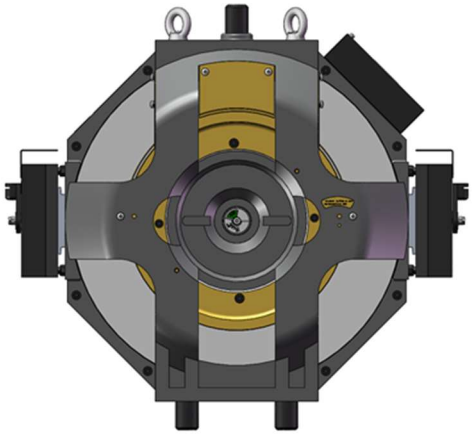

© Hollister-Whitney Elevator Co. LLC

#1Hollister-Whitney Parkway

Quincy, IL 62305

Phone 217.222.0466 • Fax 217.222.0493

6/26/2025

Scan the QR code above or visit https://www.vantageelevation.com/document-library/ to find the latest revision of this manual.

WARNING

This installation and service manual is intended for the use of qualified and authorized elevator personnel ONLY. For your safety and the safety of others, do not attempt ANY procedure that you are not qualified and authorized to perform. Recommended procedures must be done in accordance with the applicable rules of the latest edition of the National Electrical Code; the latest edition of ASME A17.1, and all governing local codes. Every attempt has been made to ensure that this guide is accurate and up to date. Hollister-Whitney Elevator Co. LLC assumes no liability for consequences resulting from any error or omission. Please notify Hollister-Whitney Elevator Co. LLC regarding any difficulties with this guide.

Contents

1 Introduction 1-1
1.1 Description 1-1
1.2 Warranty Information 1-1
2 Safety Precautions 2-1
2.1 Terms in This Manual 2-1
2.2 General Safety 2-1
2.3 Electrical Safety 2-1
2.4 Electrical Hazards 2-2
2.5 Mainline Disconnect 2-2
2.6 Test Equipment Safety 2-2
2.7 When Power Is On 2-2
2.8 Product Specific Warnings 2-2
3 Arrival of the Equipment 3-1
3.1 Receiving 3-1
3.2 Data Tag 3-1
3.3 Handling 3-1
3.4 Hoisting 3-2
3.5 Storage 3-2
3.6 Moisture, Condensation 3-3
4 Application 4-1
4.1 Overview 4-1
4.2 Codes and Standards 4-2
4.3 Environmental Specifications 4-2
4.4 Machine Specifications 4-2
4.5 Brake Specifications 4-4
5 Installation 5-1
5.1 Machine Mounting 5-1
5.2 Electrical Connection 5-3

5.3 Brake Adjustment 5-6
5.4 Brake Burnishing 5-10
5.5 Encoder Connection 5-10
5.6 Startup 5-10
5.7 Manual Brake Release 5-11
6 Maintenance 6-1
6.1 General 6-1
6.2 Cleaning 6-1
6.3 Bearings 6-2
6.4 Brake Wear 6-2
6.5 Other Items 6-3
7 Replacement 7-1
7.1 Encoder Replacement 7-1
7.2 Brake Replacement 7-7

Section

1

1 Introduction

1.1 Description

Thank you for choosing the Hollister Whitney Elevator Company (HWEC) GLR Gearless Machine.

The GLR machine has been designed for use in 2:1 roped, machine-room-less (MRL) applications with VVVF controls. The machine is designed with 30 poles to provide smooth, quiet, and long-lasting operation.

HWEC machines are designed to perform in a tolerant machine space. The machine space working temperature should be held between 35° F & 104° F, (1.7° C & 40° C) and humidity should be held to an average of 90% non-condensing.

1.2 Warranty Information

All parts and equipment manufactured by HWEC are guaranteed against defects in material and workmanship for a period of five (5) years from the date of shipment.

The HWEC warranty covers only the repair or replacement of parts, F.O.B. our factory, upon determination by inspection at our factory that warranty is applicable.

Equipment and components not of our manufacture are warranted only to the extent of the original manufacturer's warranty.

Our warranty specifically does not include any other incidental liability or expense such as transportation, labor, and unauthorized repairs.

Section

2

2 Safety Precautions

Read this section before any work is performed on elevator equipment.

✱ IMPORTANT –

The procedures contained in this manual are intended for the use of qualified elevator personnel. In the interest of your personal safety and the safety of others, do NOT attempt ANY procedure that you are NOT qualified to perform.

All procedures must be done in accordance with the applicable rules in the latest edition of the National Electrical Code; the latest edition of ASME A17.1; and any governing local codes.

2.1 Terms in This Manual

CAUTION:

Caution statements identify conditions that could result in damage to the equipment or other property if improper procedures are followed!

WARNING:

Warning statements identify conditions that could result in personal injury if improper procedures are followed!

2.2 General Safety

Specific warnings and cautions are found where they apply, and DO NOT appear in this summary.

2.3 Electrical Safety

All wiring must be in accordance with the National Electrical Code and must be consistent with all state and local codes.

2.4 Electrical Hazards

Electric shocks can cause personal injury or loss of life. Circuit breakers, switches and fuses may NOT disconnect all power to the equipment. Always refer to the wiring diagrams. Whether the A/C supply is grounded or not, high voltage will be present at many points.

2.5 Mainline Disconnect

Unless otherwise suggested, always turn OFF. Lock and tag out the mainline disconnect to remove power from the equipment.

2.6 Test Equipment Safety

Always refer to the manufacturer's instruction book for proper test equipment operation and adjustments.

Megger testing, or buzzer type continuity testers, can damage electronic components. Connection of devices such as voltmeters on certain low-level analog circuits may degrade electronic system performance. Always use a voltmeter with a minimum impedance of 1M Ohm/Volt. A digital voltmeter is recommended.

2.7 When Power Is On

Dangerous voltages exist at several points in some products. To avoid personal injury, do NOT touch exposed electrical connections or components while power is On.

2.8 Product Specific Warnings

WARNING

The GLR series machine MUST be balanced during hoisting. See paragraph 3.4 for proper lifting configurations.

WARNING

Hang the elevator car before removing ANY bolts. Failure to do so may result in severe injury and equipment damage.

Section

3

3 Arrival of the Equipment

3.1 Receiving

Immediately upon arrival of the machine, make a visual check for any external damage. If any damage incurred in transit is found, make notice of the claim in the presence of the carrier, and notify HWEC. If necessary, do not put these machines into operation without first consulting HWEC.

If the machine has gotten wet during transportation, make notice of the claim in the presence of the carrier and notify HWEC. See also Section 3.6.

3.2 Data Tag

Check the machine data tag to ensure the machine conforms to your order.

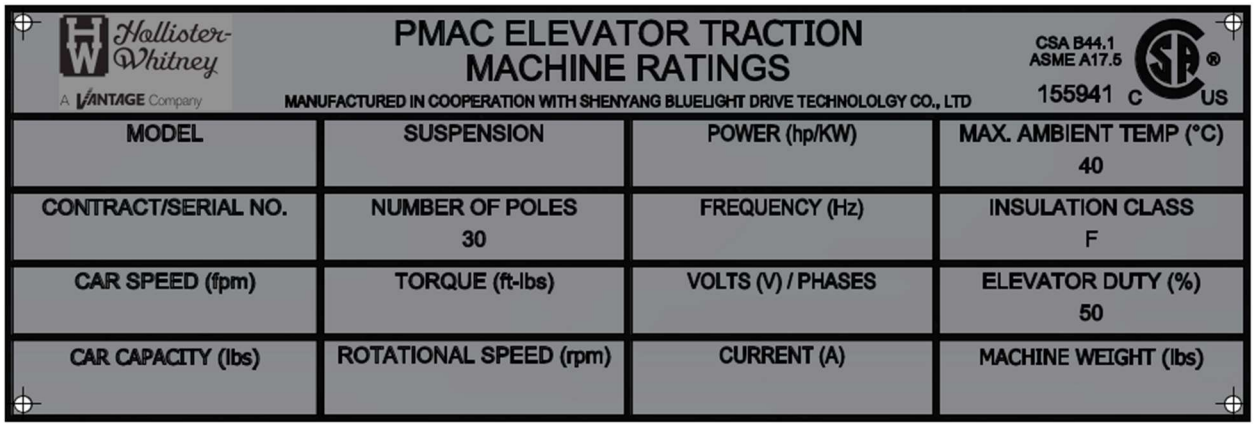

Figure 1 – Data Tag

3.3 Handling

The machine will be delivered on a wooden pallet. It can be left on the pallet and moved with a standard fork truck or pallet jack.

3.4 Hoisting

The machine weighs about 1056 pounds (480 kg). When removing the machine from the pallet, it must be lifted using the lifting eye bolts provided at the top of the machine.

When lifting the machine, use a spreader beam or other suitable rigging device to pull the lifting eye bolts directly upward.

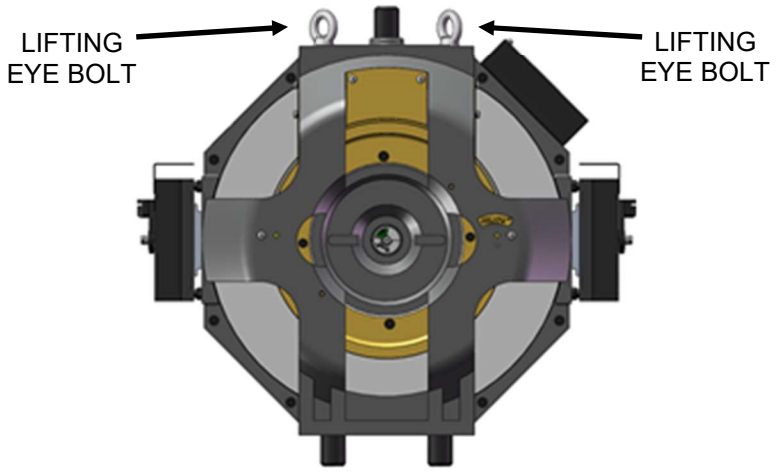

Figure 2 – Proper Lifting

WARNING

Use only the lifting eye bolts when lifting the machine! Do not use any other machine component to lift the machine! Lifting the machine by any other component will result in damage to the machine or possible failure of the component resulting in the machine falling from the hoisting system!

Follow all the necessary precautions to avoid damage to the machine or risk to personnel when moving or hoisting the machine.

3.5 Storage

During storage in a warehouse or on the elevator job site, precautions must be taken to protect the machine from dust, dirt, moisture, metal shavings and temperature extremes.

For short term storage, place the machine in a warm, dry, and clean environment.

Protect the machine from harsh weather conditions and temperature variations that can lead to condensation.

Protect from dust and metal shavings. Metal dust and shavings can be attracted into the machine by the magnets.

For longer term storage, follow the recommendations above plus; place the machine in a sealed, waterproof enclosure. Add a dehydrating packet that is sized for the enclosure's volume and humidity level.

3.6 Moisture, Condensation

Before installing the machine, and before any voltage is applied, check the machine for condensation, or any evidence of moisture or water. If any evidence of wetness is found, contact HWEC for drying instructions.

After the machine has been dried per factory instructions, it will be necessary to verify the insulation between each coil phase and earth ground. Using an insulation tester (or megohmmeter) check the insulation resistance at 500VDC. The resistance should be NO LESS than 100Mohm.

Section

4

4 Application

4.1 Overview

The GLR series machine is synchronous permanent magnet gearless machine designed for elevators. The machine has 30 poles to provide smooth, quiet, and long-lasting operation. Its configuration allows elevator capacity up to 2500 lbs. with 2:1 roping, single wrap arrangement at 50% counterbalance with up to a 9000 lb. shaft load. See Section 4.4 for complete specifications. The machine shaft load is calculated using following formula:

(Empty Car Weight + Counterbalance Weight + Capacity + Hoist Rope Weight + Compensation Weight + Traveling Cable Weight) / 2

The GLR series machine brake system is equipped with two block brakes.

The latest HWEC manuals, bulletins and procedures are available for download from the HWEC website.

The following is a list of major components of the GLR series machines. Along with a description of their functions, there is an overview of some of the critical adjustments and maintenance information. See the Installation and Maintenance chapters for more details.

1. **PM Motor Housing -** The housing contains the PM windings used to provide the necessary torque and speed to move the elevator in operation.
2. **Traction Sheave** – A grooved sheave is connected directly to the machine rotor. The grooves provide traction between the sheave and the hoist ropes.
3. **Brakes** – The electromechanical device is used to prevent the elevator from moving when the car is at rest.
4. **Sheave Guard/Rope Retainer** – Provides rope retention and keeps hoist ropes away from contact after rope installation.
5. **Machine Rotor & Brake Wheel** – The brake wheel is connected to the main shaft. When the brake is energized, the brake is released from the brake wheel.
6. **Nameplate -** Displays the machine rated data, model, and serial number.
7. **Encoder** – (Behind Cover) This device is directly coupled to the rotor of the machine. It is provided to give the absolute speed feedback of the hoist motor to the inverter drive system and to the elevator controller.

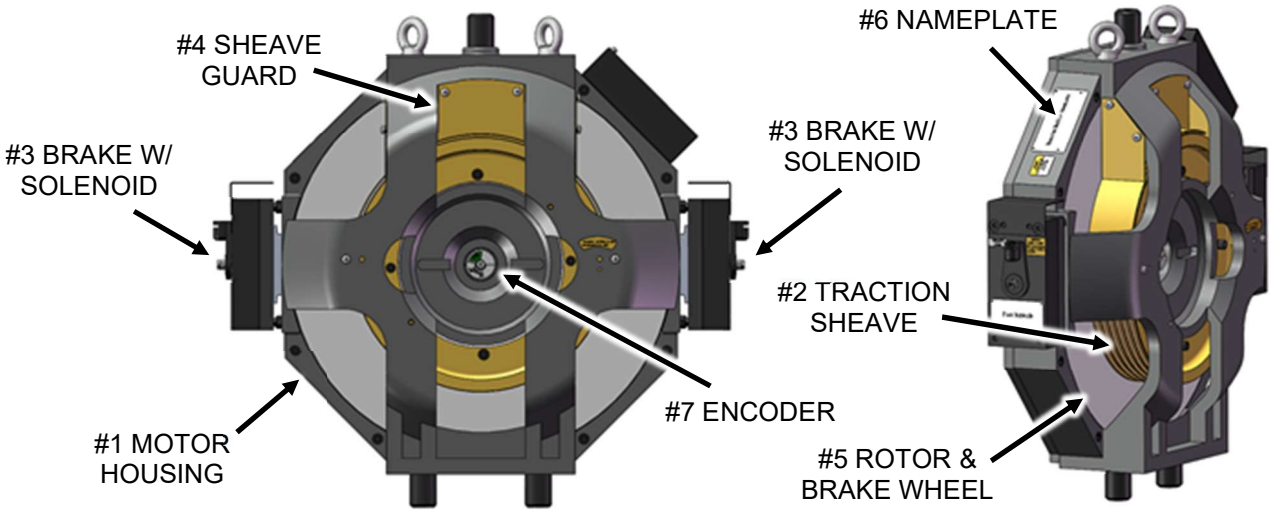

Figure 3 – Machine Components

4.2 Codes and Standards

These machines are designed to comply with ASME A17.1/CSA B44 code. The motors are designed with insulation class F minimum and have been approved by and carry a CSA approved label.

4.3 Environmental Specifications

- Operating ambient temperature: 35° F to 104° F (1.7 C to 40 C)
- Humidity average of 90% non-condensing

4.4 Machine Specifications

- Traction Sheave Diameters: 16.535 in (420 mm) or 18.897 in (480 mm).
- Rope Sizes: 8 mm or 10 mm.
- Main and emergency block brakes. Each capable of holding 125% of the load.
- Brake switches are wired normally closed as standard.
- Heidenhain ECN1313 2048 encoder and 1.5-meter-long cable (standard).
- Sheave guard/rope retainer.
- Machine dimensions, and parts list can be found at the end of this manual.

Table 1 – Maximum Detailed Specifications

Part Number	Sheave Dia (mm)	Voltage (AC)	Current (Amps)	Capacity 2:1 @ 50% CB		System Load*		Car Speed		RPM	Power		Torque	
				lbs	kg.	lbs	kg	ft/min	m/sec		HP	kW	ft/lbs	Nm
GLR-25S2-A-R401	420	480	6.1	1500	680	18,000	4000	150	0.76	69.3	4.6	3.4	350	474
			8.2	2000	906						6.1	4.6	465	630
			10.2	2500	1133						7.7	5.7	580	785
GLR-25S2-A-R402	420	480	8.0	1500	680	18,000	4000	200	1.02	92.4	6.2	4.6	350	474
			10.5	2000	906						8.2	6.1	465	630
			13.2	2500	1133						10.2	7.6	580	785
GLR-25S2-A-R403	420	480	13.8	1500	680	18,000	4000	350	1.78	161.7	10.8	8.0	350	474
			18.4	2000	906						14.3	10.7	465	630
			23.0	2500	1133						17.9	13.3	580	785
GLR-25S2-A-R201	420	208	13.9	1500	680	18,000	4000	150	0.76	69.3	4.6	3.4	350	474
			18.5	2000	906						6.1	4.6	465	630
			23.1	2500	1133						7.7	5.7	580	785
GLR-25S2-A-R202	420	208	18.5	1500	680	18,000	4000	200	1.02	92.4	6.2	4.6	350	474
			24.7	2000	906						8.2	6.1	465	630
			30.8	2500	1133						10.2	7.6	580	785
GLR-25S2-A-R203	420	208	32.2	1500	680	18,000	4000	350	1.78	161.7	10.8	8.0	350	474
			42.6	2000	906						14.3	10.7	465	630
			53.3	2500	1133						17.9	13.3	580	785
GLR-25S2-B-R404	480	480	6.3	1500	680	18,000	4000	150	0.76	60.6	4.6	3.4	400	542
			8.4	2000	906						6.1	4.6	530	718
			10.6	2500	1133						7.7	5.7	665	900
GLR-25S2-B-R405	480	480	8.2	1500	680	18,000	4000	200	1.02	80.9	6.2	4.6	400	542
			10.9	2000	906						8.2	6.1	530	718
			13.7	2500	1133						10.2	7.6	665	900
GLR-25S2-B-R406	480	480	13.9	1500	680	18,000	4000	350	1.78	141.5	10.8	8.0	400	542
			18.5	2000	906						14.3	10.6	530	718
			23.2	2500	1133						17.9	13.4	665	900
GLR-25S2-B-R204	480	208	14.8	1500	680	18,000	4000	150	0.76	60.6	4.6	3.4	400	542
			19.7	2000	906						6.1	4.6	530	718
			24.7	2500	1133						7.7	5.7	665	900
GLR-25S2-B-R205	480	208	20.0	1500	680	18,000	4000	200	1.02	80.9	6.2	4.6	400	542
			26.3	2000	906						8.2	6.1	530	718
			33.0	2500	1133						10.2	7.6	665	900
GLR-25S2-B-R206	480	208	34.3	1500	680	18,000	4000	350	1.78	141.5	10.8	8.0	400	542
			45.8	2000	906						14.3	10.6	530	718
			57.2	2500	1133						17.9	13.4	665	900

4.5 Brake Specifications

- Two brakes are supplied standard from the factory.
- Brake switch rating DC 110 V Rated current 1.32 A.
- The opening voltage of the brake is not more than 110 V, the releasing voltage is not more than 70 V, and the control range is 15 V-30 V.
- The machine brakes are mounted in two locations.

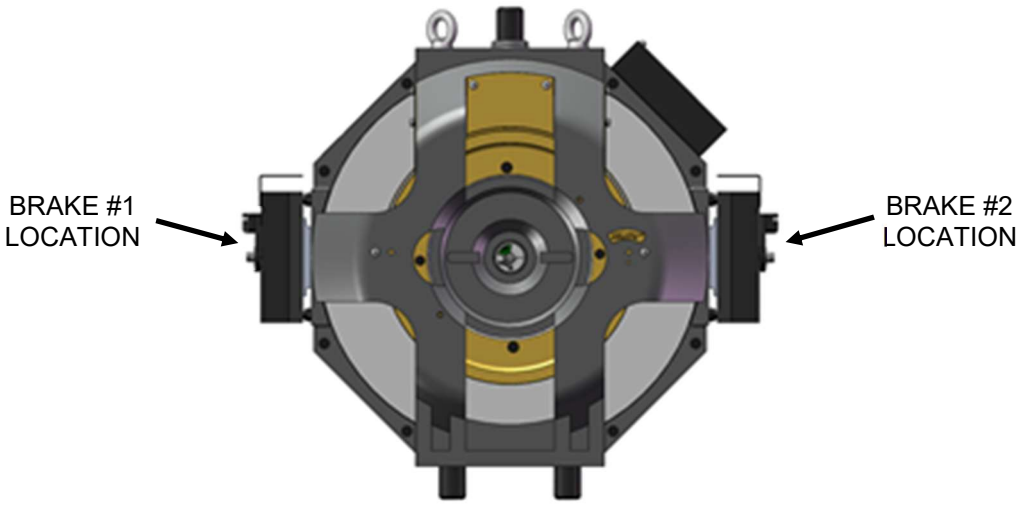

Figure 4 – Brake Locations

Section

5

5 Installation

5.1 Machine Mounting

Before hoisting the machine into place, verify all the hoisting equipment is rated for the 1056 pounds (479 kg) weight of the machine. See Section 3.4.

Provide a level, structurally supported (rated for the load on the machine) machine space with proper clearance around the machine for maintenance and adjustments.

This machine is primarily intended to be mounted in traditional overhead applications with down-pull forces on the traction sheave.

5.1.1 Rail Mounting

Figure 5 shows the mounting components. The machine is supported by two brackets that are attached to the back of the rail guide.

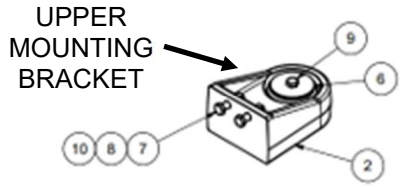

PARTS LIST			
ITEM	QTY	PART NUMBER	DESCRIPTION
1	1	GLR-25S2-001	LOWER MOUNTING BRACKET
2	1	GLR-25S2-002	UPPER MOUNTING BRACKET
3	1	GLR-25S2-003	PAD, ISOLATION
4	4	GLR-25S2-004	BOLT LOCKING PLATE
5	3	GLR-25S2-005	CYLINDRICAL ISOLATION BUSHING
6	3	GLR-25S2-006	PLATE WASHER, OVERSIZED
7	1	GT31-502	THREAD LOCKER, 243
8	5	M12 LOCK WASHER	ZINC-PLATED LOCK WASHER, DIN 127B
9	10	M12 X 1.75 X 50	ZINC-PLATED CLASS 8.8 STEEL HEX HEAD SCREW, DIN 933
10	3	M12 X 1.75 X 110	ZINC-PLATED CLASS 8.8 STEEL HEX HEAD SCREW, DIN 931
11	2	M12 X 1.75	ZINC-PLATED CLASS 8 STEEL HEX NUT, DIN 934

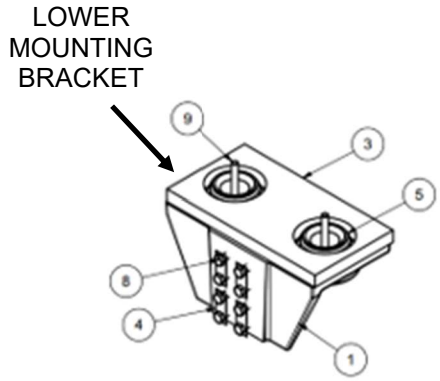

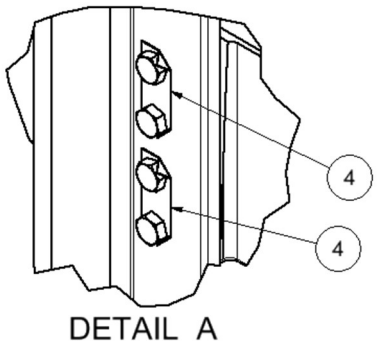

Figure 5 – Mounting Components

Mounting Procedure: Fasten the lower mounting bracket to the back of the rail using the M12 x 1.75 x 50 bolts, thread locking fluid and the bolt locking plates provided. Tighten the bolts to 55 ft-lbs of torque. After the bolts have been properly torqued, bend the bolt locking plates into place, as shown in detail A, preventing the bolts from loosening. Once the lower mounting bracket is securely fastened to the back of the rail, place the isolation pad onto the top of the lower mounting bracket, aligning the holes in the isolation pad with the holes on top of the lower mounting bracket.

Using the M12 x 1.75 x 110 bolts, lock washers, oversized plate washers, and thread locking fluid, fasten the three cylindrical isolation bushings to the machine mounting pins. There are two pins on the bottom of the machine and one pin on top of the machine.

Hoist the machine over the lower mounting bracket and carefully lower the machine down onto the lower mounting bracket, pinning the isolation pad between the machine and lower mounting bracket.

Once the machine is in position on the lower mounting bracket, the upper mounting bracket can be attached. Lower the upper mounting bracket onto the cylindrical isolation bushing at the top of the machine and fastened to the back of the rail using the M12 x 1.75 x 50 bolts, lock washers, M12 x 1.75 hex nuts, and thread locking fluid.

The mounting brackets are pre-drilled and tapped to accommodate the hole spacings shown in Figure 6 below. An exploded view of the brackets and isolation components are shown in Figure 7.

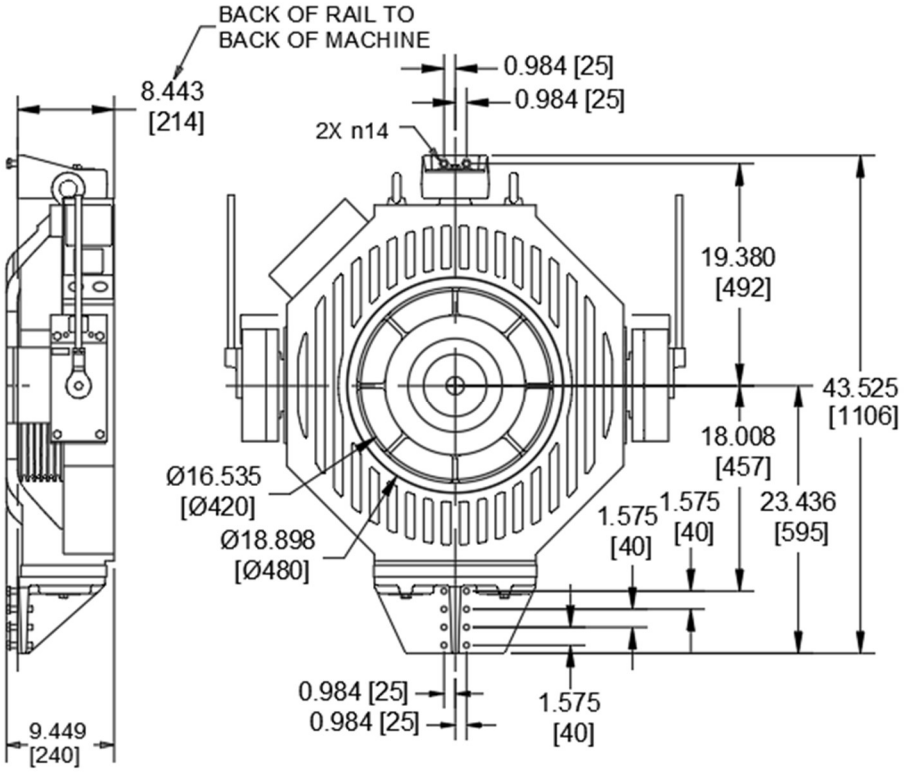

Figure 6 Mounting hole Dimensions

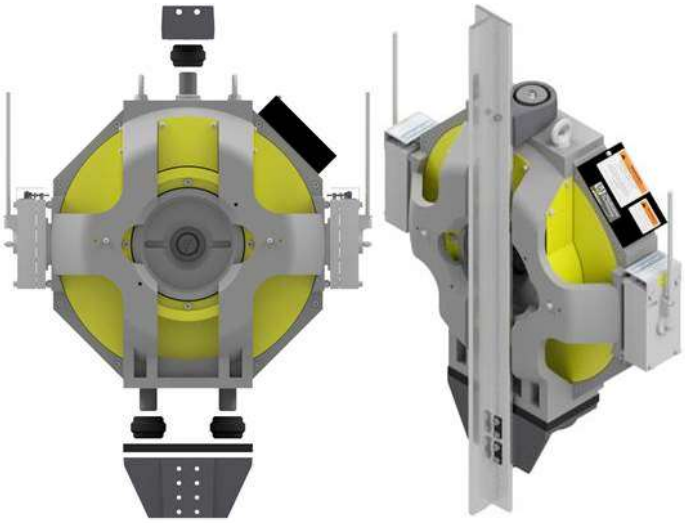

Figure 7 – Machine Mounting

5.2 Electrical Connection

Use the project wiring diagrams (with the motor configuration information) to connect the motor to the controller.

WARNING

Before performing any electrical connections, make sure that the power supply is turned off. Only then proceed with connecting electrical leads to power supply. Never work in machine electrical enclosure while power supply is on!

Direct connection to the three-phase power is forbidden, it may destroy the motor.

5.2.1 Machine Wiring

- The Thermal Protection Switch (TPS) is wired with leads labeled and supplied into the machine electrical enclosure. Refer to Figure 8 – Machine Wiring.
- Consult your controller manufacturer for appropriate TPS connections.
- Verify the electrical supply from the elevator drive and brake power supplies match the machine data tag. Refer to Figure 1.
- Connect the U-V-W lines from the drive as shown.
- Earth Ground connects to the ground lug terminal inside the electrical enclosure.

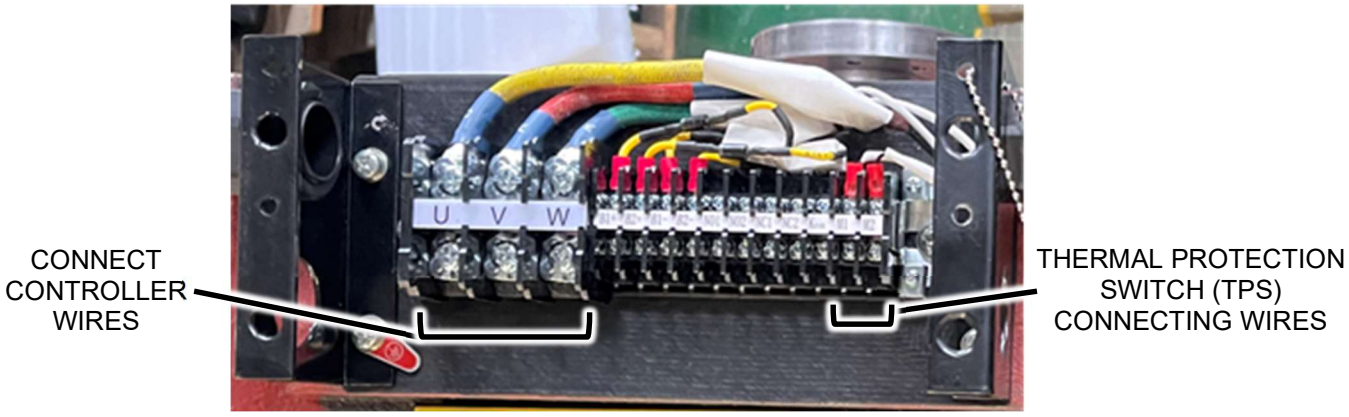

Figure 8 – Machine Wiring

Note - Check and tighten all leads (motor side and line side) on installation.

WARNING

THE MACHINE AND EMERGENCY BRAKE COILS MUST BE INDEPENDENT!

IT IS THE RESPONSIBILITY OF THE USER TO CONNECT THE MOTOR IN ACCORDANCE WITH THE CURRENT LEGISLATION AND REGULATIONS IN THE COUNTRY OF USE. THIS IS PARTICULARLY IMPORTANT IN REGARD TO WIRE SIZES USED TO CONNECT THE POWER AND EARTH GROUND AND THE TYPE AND SIZE OF FUSES.

5.2.2 Brake Wiring

- Both main brake and emergency brake are designed to work at 50% duty cycle. As a result, both brakes should work in the same cycle, it is not allowed to keep emergency brake energized continuously.
- At each running cycle, it is suggested to set the emergency brake close after 0.5s-1s of main brake close. Both brakes should open at the same time
- Connect the machine brake and emergency brake as shown in Figure 9 – Brake Wiring.
- The brake switches are wired “normally closed” from the factory.

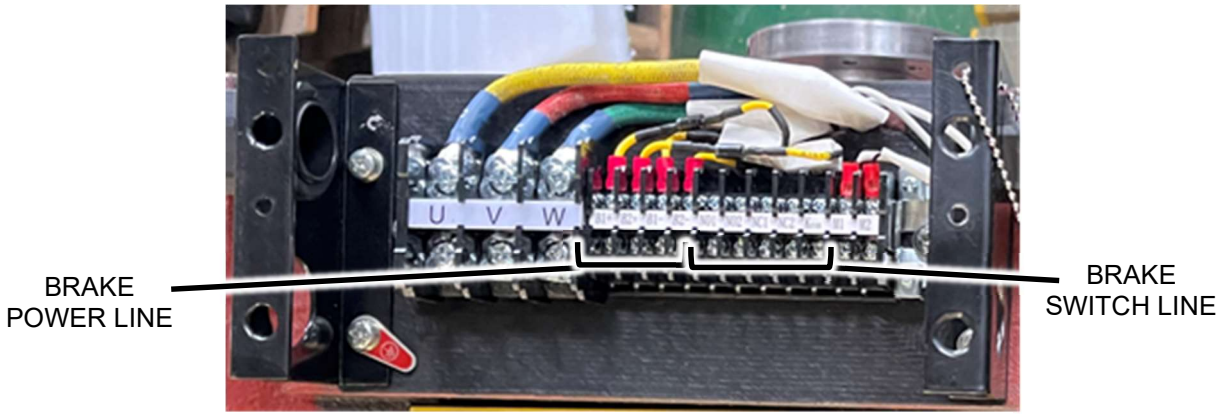

Figure 9 – Brake Wiring

WARNING

- **Brake coils are designed to be de-energized during each elevator stop.**
- **Verify brake voltage with a meter at the machine.**
- **110 VDC excitation voltage for 3 seconds.**
- **70 VDC “hold” voltage.**

5.3 Brake Adjustment

WARNING

Before performing any maintenance on the machine brakes, take all necessary safety precautions to immobilize the car and counterweight to prevent any unintended movement during the maintenance period that may result in injury or death!

WARNING

Brakes must be adjusted after the car and counterweight are suspended by the machine!

As brake pads are worn or new pads are installed readjustment is required.

Read all of section 5.3 prior to adjusting brake!

5.3.1 Required Tools

- TORQUE WRENCH (45 FT-LBS)
- 16MM SOCKET
- 21MM OPEN END WRENCH
- 0.012” (0.30MM) FEELER GUAGE (USED AS GO)
- 0.016” (0.40MM) FEELER GUAGE (USED AS NO-GO)
- 0.022” (0.55MM) FEELER GUAGE (MAX AIR GAP CHECK)

5.3.2 Air gap (See Figure 10 through Figure 13)

The air gap of the brake is the space between the brake body and the moveable shoe plate (shown in Figure 10). This gap must be checked to ensure proper operation of the brake. The correct air gap is between 0.012” (0.30 mm) to 0.022” (0.55 mm). It is preferable to keep the gap close to minimum < 0.016” (0.36 mm).

Figure 10

Figure 11

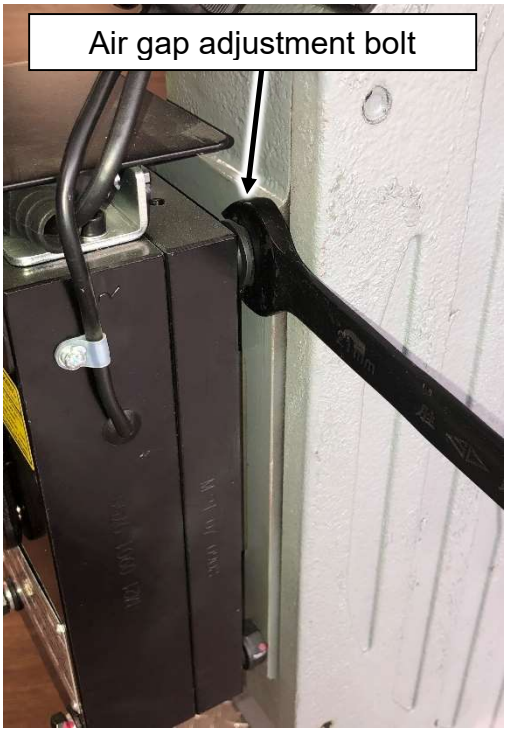

Figure 12

Figure 13

5.3.2.1 Air gap adjustment

An initial air gap check is to take place after the block brake has been properly installed and fixed bolts torqued to 45 ft-lb. (car and counterweight suspended by machine).

1. Using a 16 mm wrench, loosen the four fixed bolts. See Figure 11.

2. Using a torque wrench and 16 mm socket, torque the fixed bolts in an “X” pattern to 45 ft-lb (60 N-m) See Figure 11.

3. Confirm the air gap using a 0.012” (0.30 mm) and 0.016” (0.36 mm) go no-go feeler gauge to check the air gap at all four corners. The 0.012 (0.030 mm) go should feeler gauge should fit and the 0.016” (0.36 mm) should not fit. If this is the case, no adjustment is necessary. See Figure 10.

5.3.2.2 When the air gap of brake is more than 0.016” (0.36 mm), please do as follows:

1. Loosen one of the 4 fixed bolts with a 16 mm wrench. See Figure 11.

2. Use a 21 mm wrench, rotate the adjustment bolt corresponding to the loosened fixed bolt in small increments, less than ½ a flat of the hex head, counterclockwise. See Figure 12.

3. Retorque the 16mm fixed bolts to 45 ft-lbs. (60 N-m) See Figure 11.

4. Confirm air gap is 0.012 (0.30mm) to 0.016” (0.36 mm) using a feeler gauge. See Figure 10. Repeat for 3 remaining bolts.

5.3.2.3 When the air gap of brake is less than 0.012” (0.30 mm) please do as follows:

1. Loosen one fixed bolt with a 16 mm wrench see Figure 11.

2. Turn the 21 mm adjustment bolt corresponding to the loosened fixed bolt clockwise in small increments, less than ½ turn of the hex head flat. See Figure 12.

3. Retorque 16 mm fixed bolts to 45 ft-lb (60 N-m). See Figure 11.

4. Confirm air gap is within 0.012” (0.30 mm) to 0.016” (0.36 mm) using a feeler gauge. See Figure 10.

5.3.3 Manual Brake Release “Arm Free play”

- Check “free travel” only after 5.3.1 Brake Air Gap has been completed.
- Manual release arm “free travel is factory set to ½” both directions. See Figure 14.
- Move Brake Arm without handle as shown below, while measuring the travel.
- If Adjustment is needed contact HOLLISTER WHITNEY ELEVATOR.

Figure 14

5.3.4 Verify Brake Function

When testing the brakes electrically energize them. Once brakes are adjusted run the car to verify the brakes are relatively quiet on stop and start. Verify no noticeable rubbing noise occurs during machine operation. Once adjustment is confirmed ensure dust guards are present to prevent dust buildup which can cause brake failure.

5.4 Brake Burnishing

WARNING

Brakes must be burnished to achieve full stopping torque!

Each brake on the machine must be burnished separately. Repeat the following procedure for each brake.

1. Clamp the brake on the rotor. Ensure brake circuit is de-energized.
2. Run the elevator in the direction of the load at 11 RPM for 1 minute.
    a. If the overall travel of the elevator will not allow the burnishing time to be met in one pass, open (energize) the brake at the bottom of the hoist way, lift the load back to the top, and repeat the run until the burnishing time is achieved.
    b. Stop the elevator occasionally to ensure the brake and motor do not overheat.
3. After burnishing time is achieved re-verify the air gap between brake pads and rotor.
4. Ensure air gap is within 0.012” (0.30 mm) to 0.016” (0.36 mm) using a feeler gauge.

5.5 Encoder Connection

The machines are supplied with a Heidenhain ECN1313 2048 encoder. A 1.5-meter encoder cable is connected to the encoder and extends from the front of the machine.

Connect the supplied encoder cable to the encoder cable extending from the front of the machine.

When using a KEB drive, the encoder cable can be used "as-is."

When using any other manufacturer's drive, consult the controller manufacturer for cable compatibility and availability. DO NOT modify the KEB cable without first consulting the control manufacturer. Any modification of the KEB cable will void the warranty.

5.6 Startup

Verify all the motor related settings in the elevator controller match the information on the machine data tag. Refer to Figure 1 Data Tag.

Verify that all the brake parameters match the information on the machine data tag. Refer to Figure 1 Data Tag.

Follow the controller manufacturer's procedure for alignment of the magnets.

Briefly run the machine to verify the machine functionality and brake operates correctly.

Verify the drive sheave is plumb and aligned with the rope drop locations.

Install the hoist ropes, adjust the rope shackles, and check the ropes for equal tension. The rope tension must be uniform, or it may cause vibration and premature wear on the traction sheave and hoist ropes.

Re-verify that the traction sheave is plumb once the machine is fully loaded.

5.7 Manual Brake Release

The brakes can be manually released in the event the power is off.

NOTE: The manual releasing device should be operated by 2 professionals, and make sure the power is shut down first.

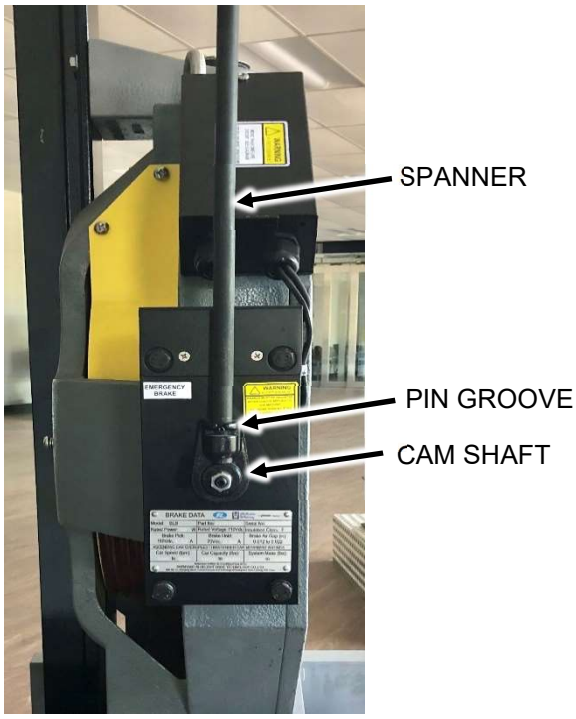

Figure 15

Insert the spanners into the cam release on top of each brake. Align the pin on the spanner with the mating groove on the cam release to prevent the spanner from slipping.

Apply force to the end of the spanner until the brake releases from the brake wheel.

The brake opening spanners must be removed from the cam release prior to normal elevator operation.

Section

6

6 Maintenance

WARNING

Before performing any maintenance checks on equipment, take all the necessary safety precautions to immobilize the car and counterweight to prevent any unintended movement during the maintenance period that may result in injury or death!

6.1 General

To keep equipment functioning efficiently, good maintenance practices must be established, observed, and maintained. Systematic inspections of the equipment should be scheduled, and records kept of these inspections. Monitoring these records will indicate any sign of a potential issue.

Each installation has its own special conditions, so it is not possible for HWEC to outline an overall plan for periodic maintenance. HWEC would recommend, at a minimum, yearly inspections, but installation conditions may warrant a more frequent schedule. The maintenance contractor will need to make the final determination.

6.2 Cleaning

Dirt, dust, excess lubrication, and moisture are the greatest enemies of electrical equipment and of maintenance teams in general. Dirt and dust layers on a machine can prevent heat dissipation, which can lead to overheating and eventual insulation breakdown. Many types of dust in an elevator machine room are electrically conductive and can also lead to insulation failure. Dust and dirt can draw moisture to unpainted surfaces such as brake rods causing oxidation that can cause brake faults. Excess lubrication can draw dust and dirt as well.

Dust and dirt can be removed from surfaces with a dry, lint-free cloth, or with suction. With suction, however, care must be taken to not build up or discharge static electricity while cleaning. Dry, compressed air (at less than 50psi) may also be used to remove dirt and dust, however, this must be closely monitored as the compressed air will re-suspend the dust and dirt in the machine room atmosphere.

6.3 Bearings

GLR series machine uses sealed bearings, no need to maintain, no need to add grease.

Bearings L_{10} calculated life rating (based on speed, loads and 50% duty) is approximately 20 years. Please note that installation conditions vary, so shorter or longer bearing life may be experienced.

6.4 Brake Wear

WARNING

If the brake lining wears too much, the brake will be disabled.

6.4.1 Suggested check cycle

- Every 3 months after installation in the first 6 months.
- Every 1 year afterwards.

6.4.2 Benchmark Criteria

- Keep a constant check, check for the brake flexibility, the braking pad and the traction sheave worn, and the bearings. Replace worn and damaged parts when necessary.
- When the braking pad is a little worn, it would add additional air gap, and make the braking noise much bigger. You may adjust it according to Section 5.3
- Assembly and Armature Disc. If brake wear is excessive replace the brake lining or replace the whole brake assembly. See Figure 16.

Figure 16

6.5 Other Items

The traction wheel, brake shoe and brake wheel are usually the only components that will be worn. Among them, the brake wheel is most unlikely to be worn. Brake pads are more likely to wear but can be monitored with feeler gauges. Refer to the brake section of this manual for brake inspection procedures.

The winding working temperature of traction machine shall not exceed 130 ℃. It can be controlled by the thermal switch in the main machine. When the temperature reaches 130 ℃, the traction machine shall be stopped.

When the traction machine rotates under the passive condition, it will be in the state of power generation. At this time, high voltage will be generated at the host terminal. Attention shall be paid to avoid electric shock and equipment damage.

Grease and other impurities shall be avoided between the brake pad and the brake wheel to avoid the decrease of braking force of the brake system. If the residual thickness of the brake pad is less than 5 mm due to wear, the brake pad shall be replaced.

Traction wheels are the most likely item on the machines to wear. Periodic measurements of rope depth and the evenness of wear for all ropes (groove depth should wear evenly) should be monitored. Cable should not be more than 0.125 inch (1/8”) below the outer rim of the traction wheel.

Check machine guarding and rope retainers for clearance and attachment hardware for tightness. Adjust as necessary.

Section

7

7 Replacement

WARNING

Have only qualified personnel perform the replacement work. The person who performs the replacement work must make sure that the machine power is off, and that the elevator will not move unexpectedly.

7.1 Encoder Replacement

The encoder is located in a pocket directly behind the car rail.

Required Tools & Materials:

- Encoder (ECN 1313)
- Hex wrench
  - 2 mm
  - 4 mm
  - 6 mm
  - 8 mm
- Hex sockets
  - 2 mm
  - 4 mm
- Torque Wrench (Need to measure 9 in-lbs. and 44 in-lbs.)
- M10 bolt (at least 1” or 25 mm in length)

7.1.1 Encoder Removal

Figure 17

1. Remove the encoder cover bolt and the encoder cable protective cover using the hex wrench (4 mm). See Figure 18.

Figure 18

2. Carefully remove encoder cable, See Figure 19. **Note: Do not apply excessive pressure on the cable. It may destroy the encoder cable.**

Figure 19

3. Find the M2.5 encoder locking screw and loosen it using the hex wrench (2 mm). The screw does not need to be removed. See Figure 20.

Figure 20

4. Loosen the bolt M5 inside by hex wrench (4 mm) 2~3 turns only. Do not remove this bolt yet **(M5 bolt must remain in the encoder so the M10 bolt can push against it)**. See Figure 21.

Figure 21

5. Insert an M10 bolt into the encoder housing. See Figure 22.

Figure 22

6. Turn the M10 bolt against the M5x50 bolt to push the encoder from the shaft. The encoder will “pop” free and will be loose to the touch yet still retained by the M5 bolt. See Figure 23.

Figure 23

7. Remove both bolts and the encoder using the notch in the machine housing. See Figure 24. **Note: Both bolts must be removed to get the encoder out from behind the rail.**

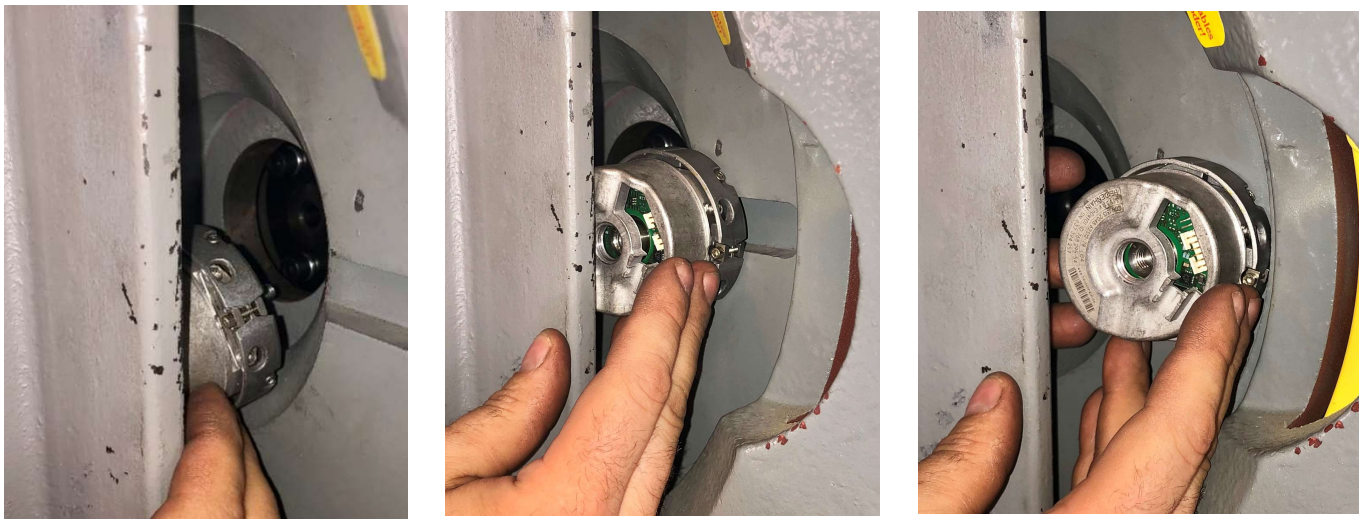

Figure 24

7.1.2 Encoder Installation

What's in the box, see Figure 25.

Figure 25

1. The encoder is installed in the pocket behind the car rail. Insert the encoder into the pocket as shown in Figure 26. There is a taper in the front of the encoder shaft, put the encoder shaft into the hole of the shaft.

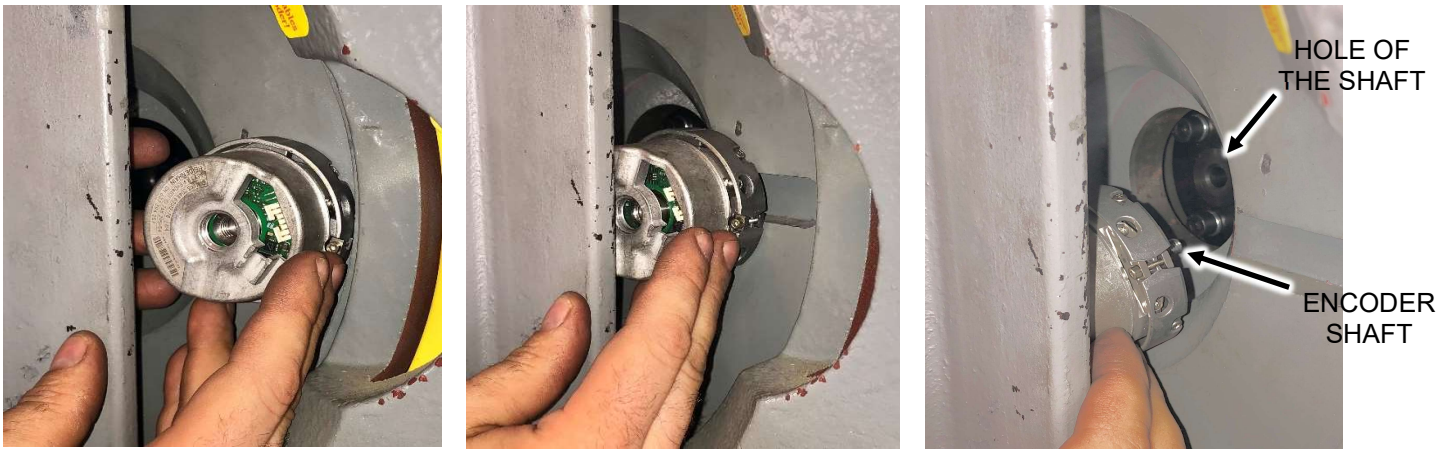

Figure 26

2. Make the encoder connect with the shaft with the M5 installation bolt, fix the encoder on the shaft and torque wrench to tighten the bolt to 44 in-lbs. using a hexagon spanner. See Figure 27.

Figure 27

3. Rotate the encoder, it should be very flexible at this time, tighten the encoder locking screw according to 11 in-lbs. by a hexagon spanner, make it so the encoder outer cannot rotate by hand. See Figure 28.

Figure 28

4. Install the encoder cable on the encoder. Take care to orient the plug and socket correctly. See Figure 29. **Note: Do not apply excessive pressure on the cable. It may destroy the encoder cable.**

Figure 29

5. Place the cable cover on the encoder and secure with the encoder cover bolt (and cover) to the encoder. See Figure 30.

Figure 30

6. Reconnect the power supply of machine and test it.
7. Align the encoder per controller instructions.

7.2 Brake Replacement

Required Tools & Materials:

- Adjustable wrench
- Hex wrench (4 mm, 5 mm)
- Small flat head screwdriver

WARNING

Before performing any maintenance on the machine brake(s), land the counterweight and take all the necessary safety precautions to immobilize the car and counterweight to prevent any unintended movement during the maintenance period that may result in injury or death!

Read the entire brake replacement procedure before beginning any of the steps outlined below. Contact HWEC with any questions prior to beginning the brake repair or replacement.

Before opening any electrical enclosures on the machine, remove all electricity from the machine and brakes to prevent electrical shock that may result in injury or death during the maintenance period!

7.2.1 Brake Removal

1. Remove covers as necessary to access terminal blocks and brake pin set screw (4 mm hex key).
2. Disconnect machine power, see Figure 31.

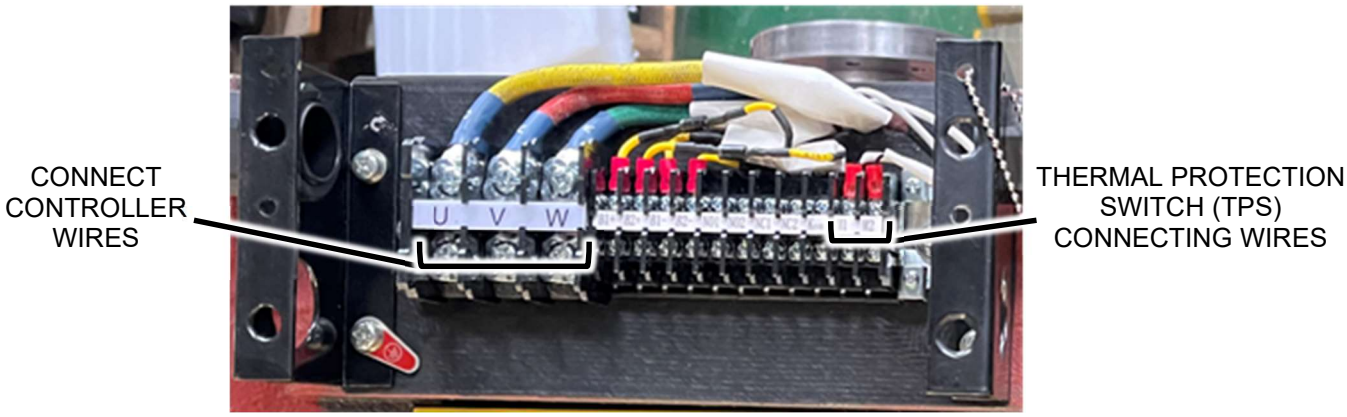

Figure 31

3. On the MACHINE side disconnect the Brake and Brake Switch wires for the brake that is to be worked on (Figure 32).

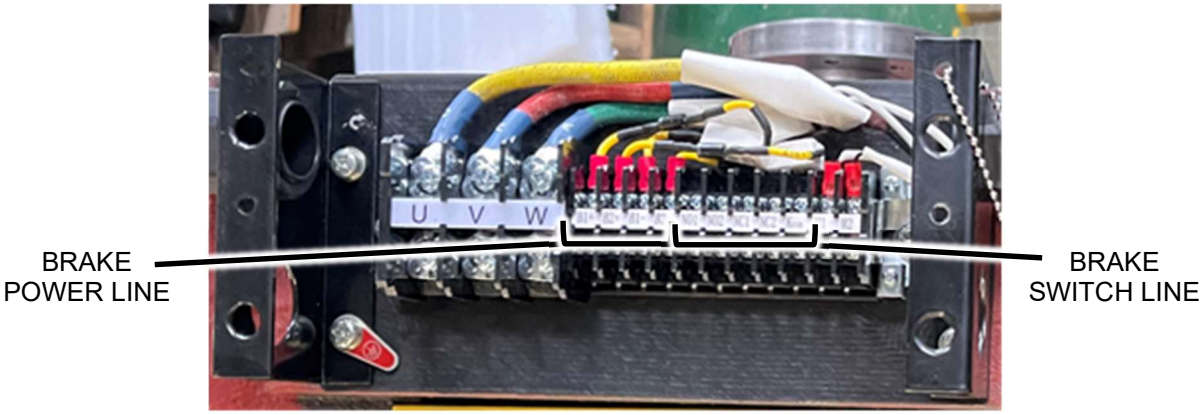

Figure 32

4. Use a wrench to loosen the mounting bolt of the fastener 1, so that the end face of the guide screw sleeve of the fastener 2 is separated from the mounting surface of the base.
5. Remove the brake and related connecting accessories.
6. New or repaired brakes are replaced in the reverse order of the above instructions. Adjust the guide screw sleeve of Part 2 and the mounting bolt of Part 1, so that the air gap between the armature of Part 5 and the armature of Part 4 is 0.3-0.55 mm, the gap between the brake belt and the brake wheel is 0.1-0.15 mm, and the distance between the guide screw sleeve of Part 2 and the iron surface of Part 4 is about 5 mm (no less than 3 mm under any conditions), as shown in Figure 33.

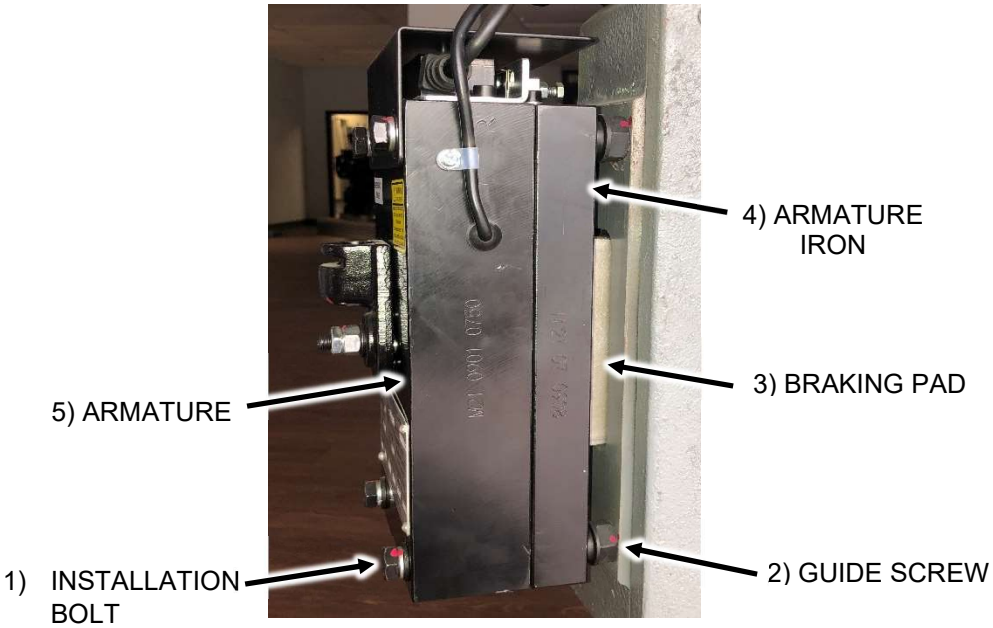

Figure 33

7.2.2 Brake Installation

After installation of the brake, please refer to Section 0 to confirm brake air gap has been restored to factory specifications.

WARNING

BRAKES MUST BE BURNISHED TO ACHIEVE FULL STOPPING TORQUE!

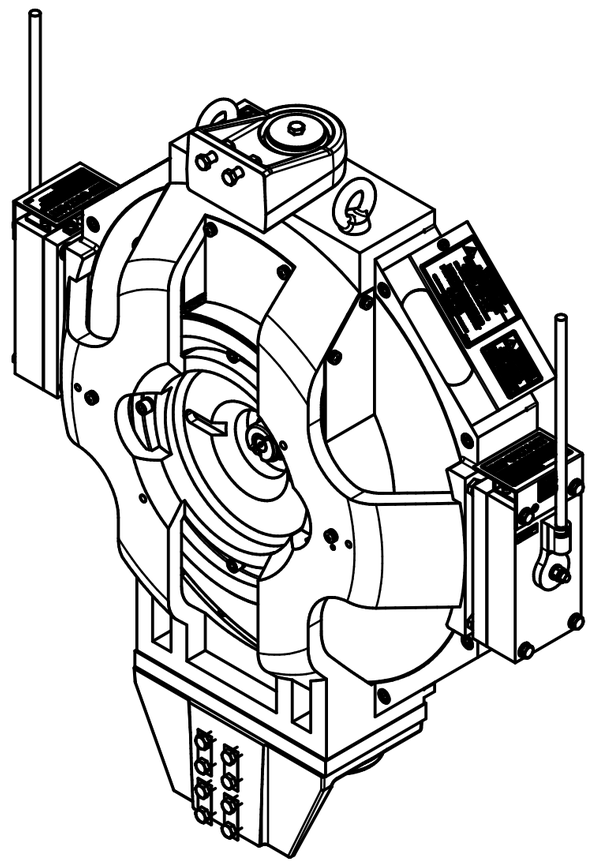

REPLACEMENT PARTS LIST

ITEM	QTY	PART NUMBER	DESCRIPTION
1	1	GLR-25S2-R	GLR GEARLESS MACHINE
1.1	1	GLR-25S2-150-LH	BRAKE, GLR
1.1.1	1	GLR-25S2-150-001	BRAKE, SHOE ASSEMBLY
1.1.2	1	GLT-25S2-150-002	BRAKE, SWITCH
1.1.3	1	GLT-25S2-150-003	BRAKE, HANDLE
1.1.4	1	P-163	IMPORTANT - BRAKE MONITOR STICKER
1.1.5	1	P-239	LABEL - BRAKE ADJUSTMENT WARNING
1.2	1	GLR-25S2-150-RH	BRAKE, GLR
1.2.1	1	GLR-25S2-150-001	BRAKE, SHOE ASSEMBLY
1.2.2	1	GLT-25S2-150-002	BRAKE, SWITCH
1.2.3	1	GLT-25S2-150-003	BRAKE, HANDLE
1.2.4	1	P-163	IMPORTANT - BRAKE MONITOR STICKER
1.2.5	1	P-239	LABEL - BRAKE ADJUSTMENT WARNING
1.3	2	GLT-25S2-152	BRAKE DIODE
1.4	1	GLR-25S2-176	TRACTION SHEAVE GUARD - 420 MM SHEAVE
	1	GLR-25S2-177	TRACTION SHEAVE GUARD - 480 MM SHEAVE
1.5	1	ENC-1313	HEIDENHAIN ENCODER ID # 768295-03 "ECN1313 2048 62S12-78"
1.6	1	P-176	TAG, GEARLESS EMERGENCY BRAKE
1.7	1	P-184	WARNING LABEL , MOVING PARTS CAN CRUSH AND CUT
1.8	1	P-221	WARNING LABEL, LIVE CIRCUITS
1.9	1	P-222	WARNING LABEL, HOT SURFACE
2	1	GLR-25S2-KIT	GLR MOUNTING KIT
3	1	GL080-001-04-020	ENCODER CABLE WITH PLUGS - 1.5 METER LENGTH
4	1	P-230	NAMEPLATE, SMALL, HOLLISTER-WHITNEY
5	1	P-238	TAG, DATA, MACHINE, CONTRACT

NOTES UNLESS OTHERWISE SPECIFIED:

1. RATINGS:
   - USAGE: SINGLE WRAP, 2:1
   - WHEEL DIAMETER: 420mm OR 480mm
   - VOLTAGE: 208V OR 480V
   - SPEED: UP TO 350 fpm
   - CAPACITY: UP TO 2,500#
   - SHAFT LOAD: 9,000#
   - SYSTEM LOAD: 18,000#
2. SEE SHEETS 3 AND 4 FOR ADDITIONAL RATINGS CHARTS.
3. BLUE LOCTITE OR EQUIVALENT REQUIRED ON ALL BOLTED CONNECTIONS.

WEIGHT: 1130 lbmass

A	PRODUCTION RELEASE, PUR #1809	9/8/23

THIS DRAWING IS SUPPLIED AS A REPRESENTATION OF THE EQUIPMENT HOLLISTER-WHITNEY ELEVATOR CO. LLC ("MANUFACTURER") HAS AGREED TO SUPPLY. SLIGHT ADJUSTMENTS MAY OCCUR DURING MANUFACTURING AND INSTALLATION. ANY MODIFICATIONS NOT APPROVED IN WRITING BY MANUFACTURER MAY AFFECT OPERATION, VOIDS ANY WARRANTY AND RELEASES MANUFACTURER OF ALL LIABILITY.
THIS DOCUMENT CONTAINS CONFIDENTIAL AND PROPRIETARY INFORMATION THAT CANNOT BE REPRODUCED OR DIVULGED, IN WHOLE OR IN PART, WITHOUT WRITTEN AUTHORIZATION FROM THE MANUFACTURER.

THIRD ANGLE PROJECTION

HOLLISTER-WHITNEY
ELEVATOR CO. LLC

TITLE: GLR-25S2 GEARLESS MACHINE

DRAWN BY	SCALE	MATERIAL	REFERENCE TOL.
AEW	1:8	SEE TABLE	ALL DIMENSIONS REFERENCE UNLESS OTHERWISE SPECIFIED

SHEET SIZE	DATE	
B	2/13/2023	GLR-25S2 SHEET 1 OF 4

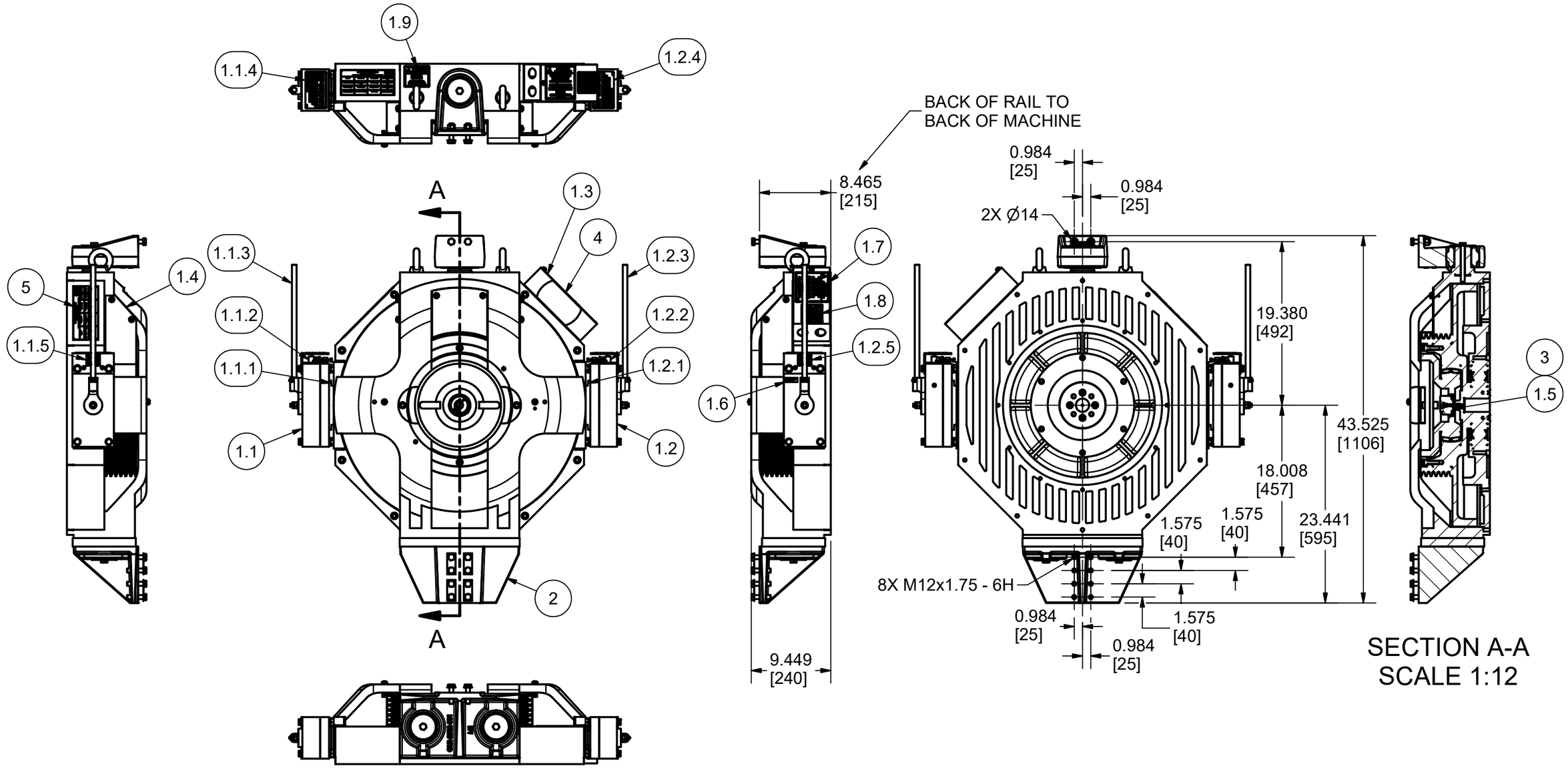

WEIGHT: 1130 lbmass

A	PRODUCTION RELEASE, PUR #1809	9/8/23	

THIS DRAWING IS SUPPLIED AS A REPRESENTATION OF THE EQUIPMENT HOLLISTER-WHITNEY ELEVATOR CO. LLC ("MANUFACTURER") HAS AGREED TO SUPPLY. SLIGHT ADJUSTMENTS MAY OCCUR DURING MANUFACTURING AND INSTALLATION. ANY MODIFICATIONS NOT APPROVED IN WRITING BY MANUFACTURER MAY AFFECT OPERATION, VOIDS ANY WARRANTY AND RELEASES MANUFACTURER OF ALL LIABILITY.
THIS DOCUMENT CONTAINS CONFIDENTIAL AND PROPRIETARY INFORMATION THAT CANNOT BE REPRODUCED OR DIVULGED, IN WHOLE OR IN PART, WITHOUT WRITTEN AUTHORIZATION FROM THE MANUFACTURER.

THIRD ANGLE PROJECTION

HOLLISTER-WHITNEY
ELEVATOR CO. LLC

TITLE
GLR-25S2 GEARLESS MACHINE

DRAWN BY	SCALE	MATERIAL	REFERENCE TOL.
AEW	1:12	SEE TABLE	ALL DIMENSIONS REFERENCE UNLESS OTHERWISE SPECIFIED

SHEET SIZE	DATE	
B	2/13/2023	GLR-25S2 SHEET 2 OF 4

208V, 2:1, 420mm SHEAVE, SINGLE WRAP

HOLLISTER-WHITNEY ORDERING PART #	Rope Diameter	Speed (fpm)	Capacity (lbs)	Motor Rating (HP)	Motor Rating (kW)	Poles	Rated (rpm)	Rated Voltage	Actual Voltage	Rated Freq (Hz)	Rated Current (A)	Peak Current (A)	Estimated Efficiency	Max BTU/hr	Estimated BTU/hr	Rated Torque (ft-lbs)	Max Accel Torque (ft-lbs)	Cwt (%)
GLR-25S2-A-R201A GLR-25S2-A-R201B	8 mm 10 mm	150	1500 2000 2500	4.6 6.1 7.7	3.4 4.6 5.7	30	69.3	208	168 174 180	17.3	13.9 18.5 23.1	33.4 44.4 55.4	87.1% 87.3% 87.8%	1514 1983 2376	485 634 760	350 465 580	699 930 1160	50
GLR-25S2-A-R202A GLR-25S2-A-R202B	8 mm 10 mm	200	1500 2000 2500	6.2 8.2 10.2	4.6 6.1 7.6	30	92.4	208	167 172 180	23.1	18.5 24.7 30.8	44.4 59.3 73.9	87.9% 88.2% 88.7%	1894 2456 2931	606 786 938	350 465 580	699 930 1160	50
GLR-25S2-A-R203A GLR-25S2-A-R203B	8 mm 10 mm	350	1500 2000 2500	10.8 14.3 17.9	8.0 10.7 13.3	30	161.7	208	163 170 180	40.4	32.2 42.6 53.3	77.3 102.2 127.9	91.1% 91.2% 91.9%	2440 3206 3703	781 1026 1185	350 465 580	699 930 1160	50

208V, 2:1, 480mm SHEAVE, SINGLE WRAP

HOLLISTER-WHITNEY ORDERING PART #	Rope Diameter	Speed (fpm)	Capacity (lbs)	Motor Rating (HP)	Motor Rating (kW)	Poles	Rated (rpm)	Rated Voltage	Actual Voltage	Rated Freq (Hz)	Rated Current (A)	Peak Current (A)	Estimated Efficiency	Max BTU/hr	Estimated BTU/hr	Rated Torque (ft-lbs)	Max Accel Torque (ft-lbs)	Cwt (%)
GLR-25S2-B-R204A GLR-25S2-B-R204B	8 mm 10 mm	150	1500 2000 2500	4.6 6.1 7.7	3.4 4.6 5.7	30	60.6	208	163 172 180	15.2	14.8 19.7 24.7	35.5 47.3 59.3	85.6% 85.8% 86.5%	1692 2211 2637	541 708 844	400 530 665	800 1060 1330	50
GLR-25S2-B-R205A GLR-25S2-B-R205B	8 mm 10 mm	200	1500 2000 2500	6.2 8.2 10.2	4.6 6.1 7.6	30	80.9	208	165 173 182	20.2	20.0 26.3 33.0	48.0 63.1 79.2	86.5% 86.9% 87.2%	2115 2720 3345	677 870 1070	400 530 665	800 1060 1330	50
GLR-25S2-B-R206A GLR-25S2-B-R206B	8 mm 10 mm	350	1500 2000 2500	10.8 14.3 17.9	8.0 10.6 13.4	30	141.5	208	163 170 180	35.4	34.3 45.8 57.2	82.3 109.9 137.3	90.1% 90.9% 91.4%	2715 3306 3920	869 1058 1255	400 530 665	800 1060 1330	50

WEIGHT: 1130 lbmass

NOTES UNLESS OTHERWISE SPECIFIED:

1. BRAKE INFORMATION:
   PICK VOLTAGE: 110
   PICK AMPS: 1.32
   HOLD VOLTAGE: 70
   HOLD AMPS: 0.84
2. BRAKE SWITCH NORMALLY CLOSED WHEN BRAKE IS DE-ENERGIZED

A	PRODUCTION RELEASE, PUR #1809	9/8/23

THIS DRAWING IS SUPPLIED AS A REPRESENTATION OF THE EQUIPMENT HOLLISTER-WHITNEY ELEVATOR CO. LLC ("MANUFACTURER") HAS AGREED TO SUPPLY. SLIGHT ADJUSTMENTS MAY OCCUR DURING MANUFACTURING AND INSTALLATION. ANY MODIFICATIONS NOT APPROVED IN WRITING BY MANUFACTURER MAY AFFECT OPERATION, VOIDS ANY WARRANTY AND RELEASES MANUFACTURER OF ALL LIABILITY.
THIS DOCUMENT CONTAINS CONFIDENTIAL AND PROPRIETARY INFORMATION THAT CANNOT BE REPRODUCED OR DIVULGED, IN WHOLE OR IN PART, WITHOUT WRITTEN AUTHORIZATION FROM THE MANUFACTURER.

THIRD ANGLE PROJECTION

HOLLISTER-WHITNEY
ELEVATOR CO. LLC

TITLE: GLR-25S2 GEARLESS MACHINE

DRAWN BY	SCALE	MATERIAL	REFERENCE TOL.
AEW		SEE TABLE	ALL DIMENSIONS REFERENCE UNLESS OTHERWISE SPECIFIED

SHEET SIZE	DATE	
B	2/13/2023	GLR-25S2 SHEET 3 OF 4

480V, 2:1, 420mm SHEAVE, SINGLE WRAP

HOLLISTER-WHITNEY ORDERING PART #	Rope Diameter	Speed (fpm)	Capacity (lbs)	Motor Rating (HP)	Motor Rating (kW)	Poles	Rated (rpm)	Rated Voltage	Actual Voltage	Rated Freq (Hz)	Rated Current (A)	Peak Current (A)	Estimated Efficiency	Max BTU/hr	Estimated BTU/hr	Rated Torque (ft-lbs)	Max Accel Torque (ft-lbs)	Cwt (%)
GLR-25S2-A-R401A GLR-25S2-A-R401B	8 mm 10 mm	150	1500 2000 2500	4.6 6.1 7.7	3.4 4.6 5.7	30	69.3	480	390 400 430	17.3	6.1 8.2 10.2	14.6 19.7 24.5	88.4% 88.9% 89.3%	1362 1733 2084	436 554 667	350 465 580	699 930 1160	50
GLR-25S2-A-R402A GLR-25S2-A-R402B	8 mm 10 mm	200	1500 2000 2500	6.2 8.2 10.2	4.6 6.1 7.6	30	92.4	480	410 418 430	23.1	8.0 10.5 13.2	19.2 25.2 31.7	89.2% 89.4% 89.9%	1690 2206 2617	541 706 838	350 465 580	699 930 1160	50
GLR-25S2-A-R403A GLR-25S2-A-R403B	8 mm 10 mm	350	1500 2000 2500	10.8 14.3 17.9	8.0 10.7 13.3	30	161.7	480	402 410 425	40.4	13.8 18.4 23.0	33.1 44.2 55.2	91.5% 92.1% 92.5%	2331 2878 3421	746 921 1095	350 465 580	699 930 1160	50

480V, 2:1, 480mm SHEAVE, SINGLE WRAP

HOLLISTER-WHITNEY ORDERING PART #	Rope Diameter	Speed (fpm)	Capacity (lbs)	Motor Rating (HP)	Motor Rating (kW)	Poles	Rated (rpm)	Rated Voltage	Actual Voltage	Rated Freq (Hz)	Rated Current (A)	Peak Current (A)	Estimated Efficiency	Max BTU/hr	Estimated BTU/hr	Rated Torque (ft-lbs)	Max Accel Torque (ft-lbs)	Cwt (%)
GLR-25S2-B-R404A GLR-25S2-B-R404B	8 mm 10 mm	150	1500 2000 2500	4.6 6.1 7.7	3.4 4.6 5.7	30	60.6	480	403 420 430	15.2	6.3 8.4 10.6	15.1 20.2 25.4	87.4% 88.3% 88.7%	1481 1822 2208	474 583 706	400 530 665	800 1060 1330	50
GLR-25S2-B-R405A GLR-25S2-B-R405B	8 mm 10 mm	200	1500 2000 2500	6.2 8.2 10.2	4.6 6.1 7.6	30	80.9	480	394 412 425	20.2	8.2 10.9 13.7	19.7 26.2 32.9	88.2% 88.9% 89.0%	1849 2304 2855	592 737 914	400 530 665	800 1060 1330	50
GLR-25S2-B-R406A GLR-25S2-B-R406B	8 mm 10 mm	350	1500 2000 2500	10.8 14.3 17.9	8.0 10.6 13.4	30	141.5	480	390 405 415	35.4	13.9 18.5 23.2	33.4 44.4 55.7	90.2% 91.5% 92.1%	2687 3088 3597	860 988 1151	400 530 665	800 1060 1330	50

WEIGHT: 1130 lbmass

NOTES UNLESS OTHERWISE SPECIFIED:

1. BRAKE INFORMATION:
   - PICK VOLTAGE: 110
   - PICK AMPS: 1.32
   - HOLD VOLTAGE: 70
   - HOLD AMPS: 0.84
2. BRAKE SWITCH NORMALLY CLOSED WHEN BRAKE IS DE-ENERGIZED

A	PRODUCTION RELEASE, PUR #1809	9/8/23

THIS DRAWING IS SUPPLIED AS A REPRESENTATION OF THE EQUIPMENT HOLLISTER-WHITNEY ELEVATOR CO. LLC ("MANUFACTURER") HAS AGREED TO SUPPLY. SLIGHT ADJUSTMENTS MAY OCCUR DURING MANUFACTURING AND INSTALLATION. ANY MODIFICATIONS NOT APPROVED IN WRITING BY MANUFACTURER MAY AFFECT OPERATION, VOIDS ANY WARRANTY AND RELEASES MANUFACTURER OF ALL LIABILITY.
THIS DOCUMENT CONTAINS CONFIDENTIAL AND PROPRIETARY INFORMATION THAT CANNOT BE REPRODUCED OR DIVULGED, IN WHOLE OR IN PART, WITHOUT WRITTEN AUTHORIZATION FROM THE MANUFACTURER.

THIRD ANGLE PROJECTION

HOLLISTER-WHITNEY
ELEVATOR CO. LLC

TITLE: GLR-25S2 GEARLESS MACHINE

DRAWN BY	SCALE	MATERIAL	REFERENCE TOL.
AEW		SEE TABLE	ALL DIMENSIONS REFERENCE UNLESS OTHERWISE SPECIFIED

SHEET SIZE	DATE	
B	2/13/2023	GLR-25S2 SHEET 4 OF 4

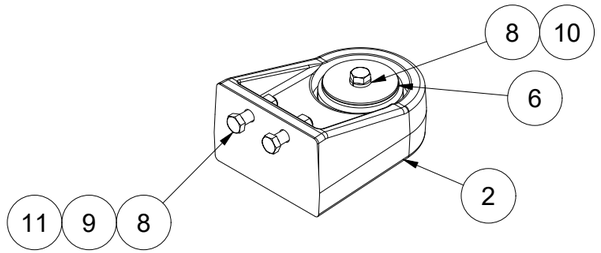

PARTS LIST			
ITEM	QTY	PART NUMBER	DESCRIPTION
1	1	GLR-25S2-001	LOWER MOUNTING BRACKET
2	1	GLR-25S2-002	UPPER MOUNTING BRACKET
3	1	GLR-25S2-003	PAD, ISOLATION
4	4	GLR-25S2-004	BOLT LOCKING PLATE
5	3	GLR-25S2-005	CYLINDRICAL ISOLATION BUSHING
6	3	GLR-25S2-006	PLATE WASHER, OVERSIZED
7	1	GT31-502	THREAD LOCKER, 243
8	5	M12 LOCK WASHER	ZINC-PLATED LOCK WASHER, DIN 127B C
9	10	M12 X 1.75 X 50	ZINC-PLATED CLASS 8.8 STEEL HEX HEAD SCREW, DIN 933
10	3	M12 X 1.75 X 110	ZINC-PLATED CLASS 8.8 STEEL HEX HEAD SCREW, DIN 931
11	2	M12 X 1.75	ZINC-PLATED CLASS 8 STEEL HEX NUT, DIN 934

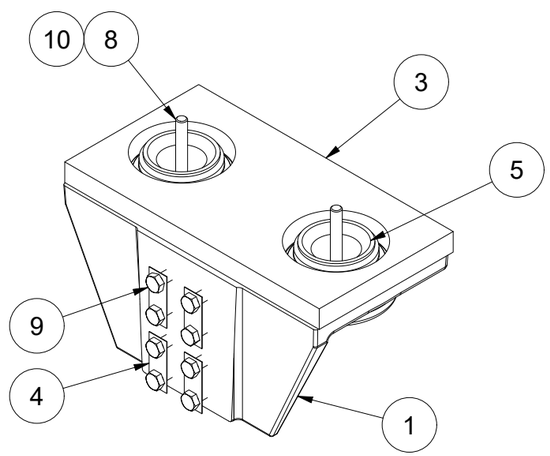

WEIGHT: 76.1 lbmass

C	ADD LOCTITE, UPDATE HARDWARE, PUR #2014	AEW 6/26/25	

THIS DRAWING IS SUPPLIED AS A REPRESENTATION OF THE EQUIPMENT HOLLISTER-WHITNEY ELEVATOR CO. LLC ("MANUFACTURER") HAS AGREED TO SUPPLY. SLIGHT ADJUSTMENTS MAY OCCUR DURING MANUFACTURING AND INSTALLATION. ANY MODIFICATIONS NOT APPROVED IN WRITING BY MANUFACTURER MAY AFFECT OPERATION, VOIDS ANY WARRANTY AND RELEASES MANUFACTURER OF ALL LIABILITY.
THIS DOCUMENT CONTAINS CONFIDENTIAL AND PROPRIETARY INFORMATION THAT CANNOT BE REPRODUCED OR DIVULGED, IN WHOLE OR IN PART, WITHOUT WRITTEN AUTHORIZATION FROM THE MANUFACTURER.

THIRD ANGLE PROJECTION

HOLLISTER-WHITNEY
ELEVATOR CO. LLC

TITLE: GLR MOUNTING KIT

DRAWN BY	SCALE	MATERIAL	REFERENCE TOL.
AEW	1:6	N/A	ALL DIMENSIONS REFERENCE UNLESS OTHERWISE SPECIFIED

SHEET SIZE	DATE	
B	2/13/2023	GLR-25S2-KIT SHEET 1 OF 1

HEIDENHAIN

Product Information

ECN 1313
ECN 1325
ERN 1387

Rotary Encoders with Plane-Surface Coupling for Elevator Servo Drive Control

July 2017

ECN/ERN 1300 series

Rotary encoders with integral bearings for elevator technology
- **Simple installation**
- **Rigid shaft coupling**
- **Plane-surface coupling for large mounting tolerances**
- **Uniform dimensions for various electrical interfaces**

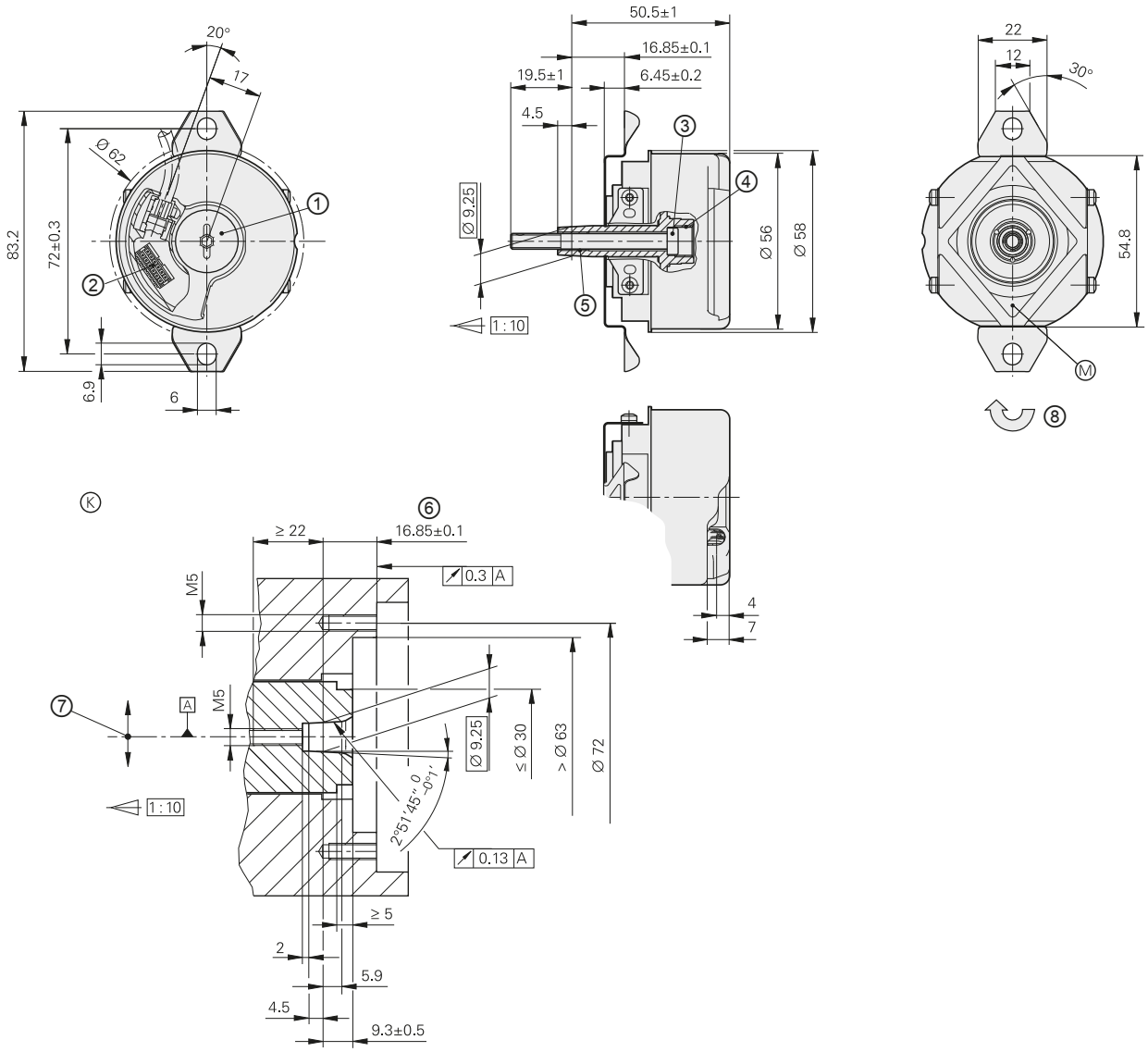

mm
Tolerancing ISO 8015
ISO 2768 - m H
< 6 mm: ±0.2 mm

A = Bearing of mating shaft
B = Bearing of encoder
K = Required mating dimensions
M = Measuring point for operating temperature
1 = Screw plug, width A/F 3 and 4. Tightening torque: 5+0.5 Nm
2 = PCB connector
3 = Self-tightening screw M5 x 50 DIN 6912 width A/F 4, tightening torque 5+0.5 Nm
4 = M10 back-off thread
5 = M6 back-off thread
6 = Max. permissible tolerance during motor shaft rotation ±1.5 mm
7 = Max. permissible static radial offset of motor shaft in indicated direction ±0.13 mm
8 = Direction of shaft rotation for output signals as per the interface description

	Absolute		***Incremental***
	ECN 1325	**ECN 1313**	**ERN 1387**
Part number	683643-xx	768295-xx	749146-xx
Interface[1]	EnDat 2.2		∿ 1 V_{PP}
Ordering designation	EnDat22	EnDat01	–
Position values/revolution	33 554 432 (25 bits)	8192 (13 bits)	Z1 track[3]
Electrically permissible speed/error[2]	≤ 15 000 rpm (for continuous position value)	≤ 1500 rpm/±1 LSB ≤ 12 000 rpm/±50 LSB	–
Calculation time t_{cal} Clock frequency	≤ 7 µs ≤ 16 MHz	≤ 9 µs ≤ 2 MHz	– –
Incremental signals[1]	–	∿ 1 V_{PP}	∿ 1 V_{PP}
Line count/system accuracy	2048/±20"		
Reference mark	–		One
Cutoff frequency –3 dB	–	≥ 400 kHz	≥ 210 kHz
Electrical connection Via PCB connector	*Rotary encoder:* 12-pin *Temperature sensor*[4]: 4-pin	12-pin	14-pin
Voltage supply	DC 3.6 V to 14 V		DC 5 V ±0.25 V
Power consumption[1] (maximum)	*3.6 V:* ≤ 600 mW *14 V:* ≤ 700 mW		–
Current consumption	*5 V:* 85 mA (typical, without load)		≤ 130 mA (without load)
Stator coupling	Plane-surface coupling		
Shaft	Taper shaft ∅ 9.25 mm; taper 1:10		
Mech. permiss. speed n	≤ 2000 rpm		
Starting torque	≤ 0.01 Nm (at 20 °C)		
Moment of inertia of rotor	$2.6 \cdot 10^{-6}$ kgm^2		
Permissible axial motion of measured shaft[5]	±1.5 mm		
Radial runout of the measured shaft	0.13 mm		
Vibration 55 Hz to 2000 Hz **Shock** 6 ms	≤ 300 m/s^2 [6] (EN 60 068-2-6) ≤ 2000 m/s^2 (EN 60 068-2-27)		
Operating temperature	–40 °C to +115 °C		–40 °C to +120 °C
Protection EN 60 529	IP40 when mounted		
Mass	≈ 0.25 kg		

[1] See *Interfaces of HEIDENHAIN Encoders* brochure
[2] Velocity-dependent deviations between the absolute value and incremental signals
[3] One sine and one cosine signal per revolution
[4] Evaluation optimized for KTY 84-130
[5] Compensation of mounting tolerances and thermal expansion, not dynamic motion
[6] As per standard for room temperature; for operating temperature Up to +100 °C: ≤ 300 m/s^2
Up to +115 °C or +120 °C: ≤ 150 m/s^2

Electrical connection

Pin layouts

ECN 1313 pin layout

17-pin coupling or flange socket M23

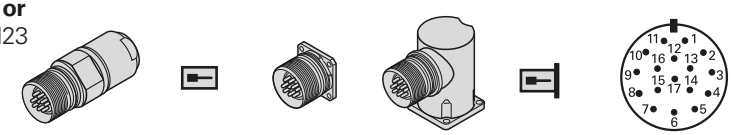

12-pin PCB connector

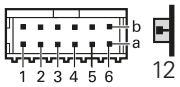

	Power supply					Incremental signals[1]				Serial data transfer			
	7	**1**	**10**	**4**	**11**	**15**	**16**	**12**	**13**	**14**	**17**	**8**	**9**
12	**1b**	**6a**	**4b**	**3a**	**/**	**2a**	**5b**	**4a**	**3b**	**6b**	**1a**	**2b**	**5a**
	U_P	**Sensor** U_P	**0 V**	**Sensor** 0 V	**Internal shield**	**A+**	**A–**	**B+**	**B–**	**DATA**	**$\overline{\text{DATA}}$**	**CLOCK**	**$\overline{\text{CLOCK}}$**
	Brown/ Green	Blue	White/ Green	White	/	Green/ Black	Yellow/ Black	Blue/ Black	Red/ Black	Gray	Pink	Violet	Yellow

	Other signals	
	5	**6**
	/	**/**
12	**/**	**/**
	Brown[2]	White[2]

Cable shield connected to housing; **U_P** = Power supply voltage; **T** = Temperature
Sensor: The sensor line is connected in the encoder with the corresponding power line.
Vacant pins or wires must not be used.

[1] Only with ordering designations EnDat 01 and EnDat 02
[2] Only for cables inside the motor housing

ECN 1325 pin layout

8-pin coupling or flange socket, M12

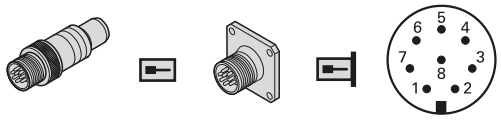

9-pin flange socket, M23

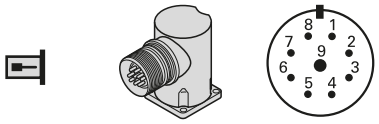

16-pin PCB connector

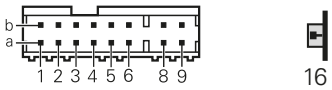

	Voltage supply				Serial data transfer				Other signals	
M12	**8**	**2**	**5**	**1**	**3**	**4**	**7**	**6**	**/**	**/**
M23	**3**	**7**	**4**	**8**	**5**	**6**	**1**	**2**	**/**	**/**
16	**1b**	**6a**	**4b**	**3a**	**6b**	**1a**	**2b**	**5a**	**8a**	**8b**
	U_P	**Sensor** U_P	**0 V**	**Sensor** 0 V	**DATA**	**$\overline{\text{DATA}}$**	**CLOCK**	**$\overline{\text{CLOCK}}$**	**T+**	**T–**
	Brown/ Green	Blue	White/ Green	White	Gray	Pink	Violet	Yellow	Brown	Green

Cable shield connected to housing
U_P = Power supply; **T** = Temperature
Sensor: The sensor line is connected in the encoder with the corresponding power line.
Vacant pins or wires must not be used.

ERN 1387 pin layout

17-pin coupling or flange socket M23

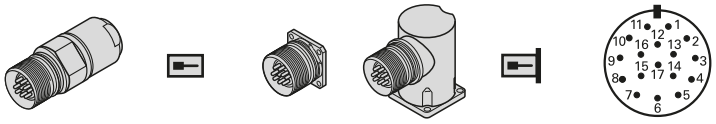

14-pin PCB connector

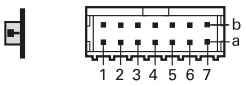

	Voltage supply					Incremental signals					
	7	**1**	**10**	**4**	**11**	**15**	**16**	**12**	**13**	**3**	**2**
	1b	**7a**	**5b**	**3a**	**/**	**6b**	**2a**	**3b**	**5a**	**4b**	**4a**
	U_P	**Sensor** U_P	**0 V**	**Sensor** 0 V	**Internal shield**	**A+**	**A–**	**B+**	**B–**	**R+**	**R–**
	Brown/ Green	Blue	White/ Green	White	/	Green/ Black	Yellow/ Black	Blue/Black	Red/Black	Red	Black

	Other signals					
	14	**17**	**9**	**8**	**5**	**6**
	7b	**1a**	**2b**	**6a**	**/**	**/**
	C+	**C–**	**D+**	**D–**	**T+**[1)]	**T–**[1)]
	Gray	Pink	Yellow	Violet	Green	Brown

Cable shield connected to housing;
U_P = Power supply; **T** = Temperature
Sensor: The sensor line is connected internally with the corresponding power line.
Vacant pins or wires must not be used.

[1)] Only for cables inside the motor housing

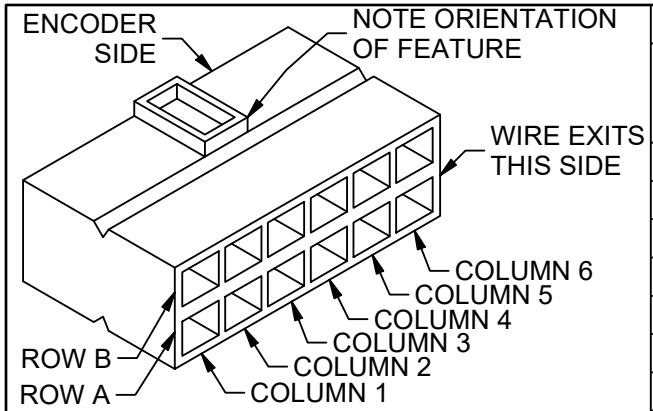

291614-02 PLUG
PIN-OUT DETAIL
SCALE 4:1

PIN LAYOUT

RECT. PLUG PIN-OUT	WIRE COLOR	FUNCTION	ROUND PLUG PIN-OUT
1A	PINK	DATA -	17
2A	GREEN/BLACK	A+	15
3A	WHITE	SENSOR (V0)	4
4A	BLUE/BLACK	B+	12
5A	YELLOW	CLOCK -	9
6A	BLUE	SENSOR (Up)	1
1B	BROWN/GREEN	POWER (Up)	7
2B	PURPLE	CLOCK +	8
3B	RED/BLACK	B-	13
4B	WHITE/GREEN	ZERO V (V0)	10
5B	YELLOW/BLACK	A-	16
6B	GREY	DATA +	14

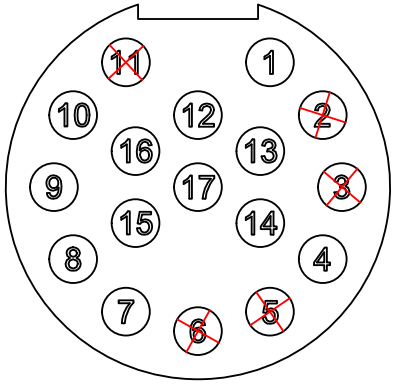

291698-25 PLUG
PIN-OUT VIEW
NOT TO SCALE
<u>NOTE</u>: NO PINS AT
2, 3, 5, 6, OR 11

NOTES: HEIDENHAIN
CABLE ASSEMBLY.
REF. ID No. 730736-22

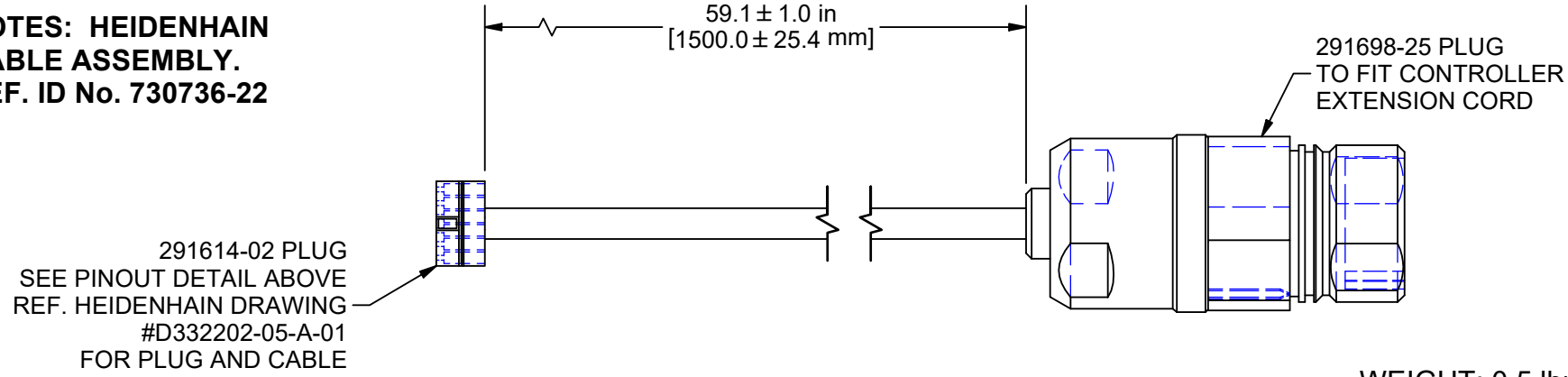

WEIGHT: 0.5 lbmass

			B	UPDATE & CLARIFY NOTES, ADD ROUND	LTL 6/16/21
				PLUG PIN-OUT & PIN VIEW, PUR #1502	
			A	PRODUCTION RELEASE, PUR #1103	LTL 6/26/19

THIS DRAWING IS SUPPLIED AS A REPRESENTATION OF THE EQUIPMENT HOLLISTER-WHITNEY ELEVATOR CO. LLC ("MANUFACTURER") HAS AGREED TO SUPPLY. SLIGHT ADJUSTMENTS MAY OCCUR DURING MANUFACTURING AND INSTALLATION. ANY MODIFICATIONS NOT APPROVED IN WRITING BY MANUFACTURER MAY AFFECT OPERATION, VOIDS ANY WARRANTY AND RELEASES MANUFACTURER OF ALL LIABILITY.
THIS DOCUMENT CONTAINS CONFIDENTIAL AND PROPRIETARY INFORMATION THAT CANNOT BE REPRODUCED OR DIVULGED, IN WHOLE OR IN PART, WITHOUT WRITTEN AUTHORIZATION FROM THE MANUFACTURER.

THIRD ANGLE PROJECTION

HOLLISTER-WHITNEY
ELEVATOR CO. LLC

TITLE
ENCODER CABLE WITH PLUGS - 1.5 METER LENGTH

DRAWN BY	SCALE	MATERIAL	REFERENCE TOL.
LTL	1 : 1	AS PURCHASED, SEE NOTES	ALL DIMENSIONS REFERENCE UNLESS OTHERWISE SPECIFIED

SHEET SIZE	DATE	
A	4/30/2019	GL080-001-04-020 SHEET 1 OF 1

Stiftsteckverbinder : SUB–D 15 pol.
Metallgehäuse mit Schirmanbindung
Gehäusebreite max 31 mm

Kabel : 4 x (2 x 0,14) + 2 x (0,5)
Geeignet für Energieführungsketten
Dauerbetriebstemperatur 80 Grad
Ölbeständig
Farbe orange RAL 2003

Buchsensteckverbinder : Metallgehäuse mit Schirmanbindung, Kontaktbuchsen

Hersteller 1 : Intercontec
Typ : ASTA 035 FR 11 12 0005 000

Hersteller 2 : Interconnectron
Typ : SPN A 17B NN NN 169

Hersteller 3 : Coninvers
Typ : RC–17 S1N8A R300

CABLE LENGTH UP TO 30 M

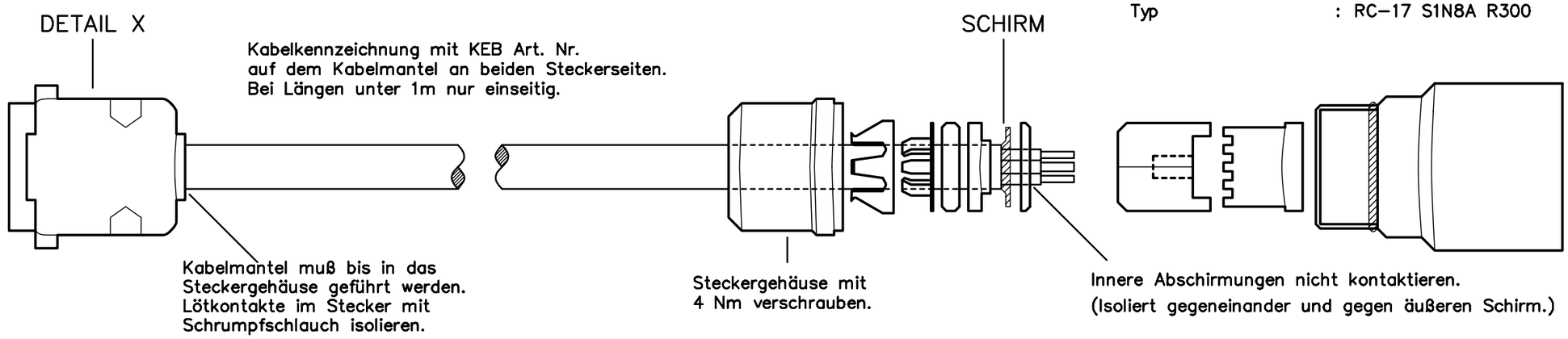

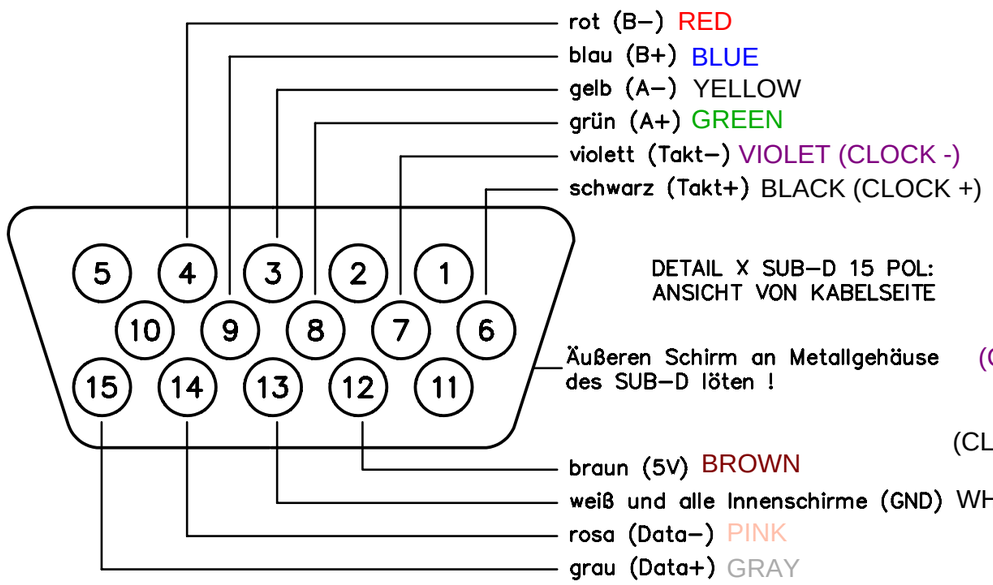

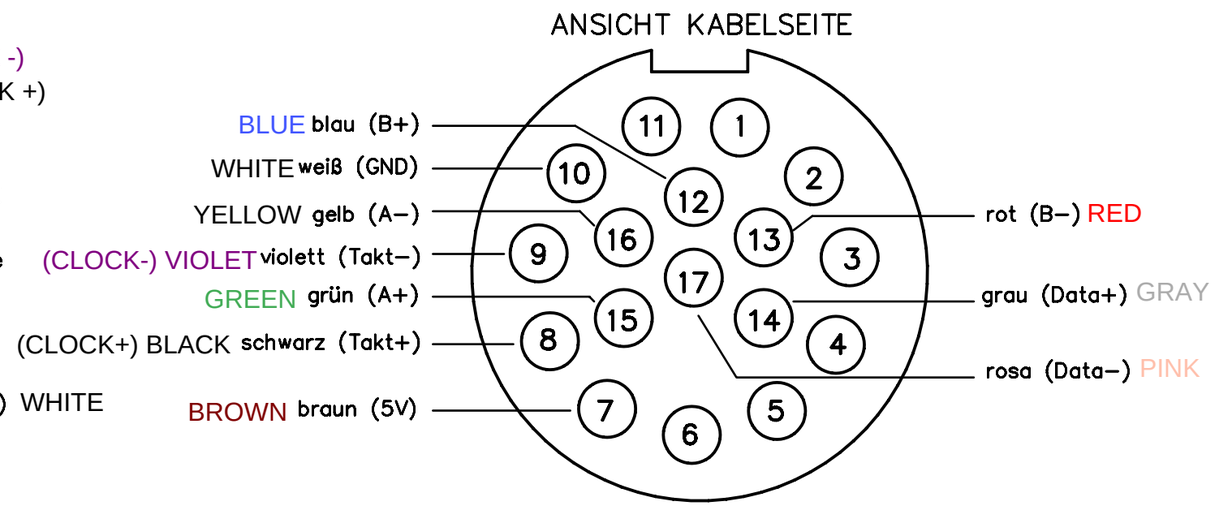

00.F5.0C1–4xPx KABELLAENGE x,x METER
00.F5.0C1–4xxx KABELLAENGE xxx METER

Änderungen : /Modifications					
	g				
	f				
	e				
	d				
	c				
	b				
	a				
Nr.:		Datum	Name	Paßmaß Size of fit	Abmaß Deviation

Rohmaß: /Rough size:	Ident–Nr.:	Menge: /Qty.:	ME	Werkstoff: /Material:	Rohteil–Nr.: /Blank–No.:

verzinkt, blau passiviert / zinc–plated, blue passivated / Schichtdicke: Thickness of coat: úm

Schutzvermerk DIN 34 beachten
Observe protection note DIN 34

Allgemeintoleranz	Tolerierung	Oberflächenangaben	Werkstückkanten
DIN 6930–m general tolerance	ISO 8015 Tolerancing	DIN ISO 1302 Surface details	DIN 6784 Workpiece edges

Keine Maße aus der Zeichnung abnehmen/Do not scale

Alle Maße in Millimeter/All dimensions in millimetres

Benennung: /Title
Geberkabel F5

Zeichnungs–Nr.: /Drawing No.:
00.F5.0C1–4005

	Datum	Name
gez.:	05.04.02	Horn
gepr.:		

Format Size | Maßstab Scale: 1:1

KEB ANTRIEBSTECHNIK
Karl E. Brinkmann GmbH
D 32677 Barntrup

Kantenbruch/Break of sharp edges

x = Rz 100
y = Rz 25
z = Rz 6,3
w = geschliffen/ground Rz 4

Ohne unsere vorherige Zustimmung darf diese Zeichnung weder vervielfältigt, noch Dritten zugänglich gemacht werden, und sie darf durch Empfänger oder Dritte auch nicht in anderer Weise mißbräuchlich verwendet werden.

Auto – CAD

This drawing may not be duplicated nor retransmitted to others without our prior permission. Any improper use is forbidden.

Stiftsteckverbinder : SUB–D 15 pol.
Metallgehäuse mit Schirmanbindung
Gehäusebreite max 31 mm

Kabel : (4 x (2x0,25) + 2 x 1,0)
Geeignet für Energieführungsketten
Helukabel Topgeber 510 77750
Aderfarbkode nicht nach DIN 47100

Buchsensteckverbinder : Metallgehäuse mit Schirmanbindung, Kontaktbuchsen

Hersteller 1 : Intercontec
Typ : ASTA 035 FR 11 12 0005 000

Hersteller 2 : Interconnectron
Typ : SPN A 17B NN NN 169

Hersteller 3 : Coninvers
Typ : RC–17 S1N8A R300

CABLE LENGTH OVER 40 METERS

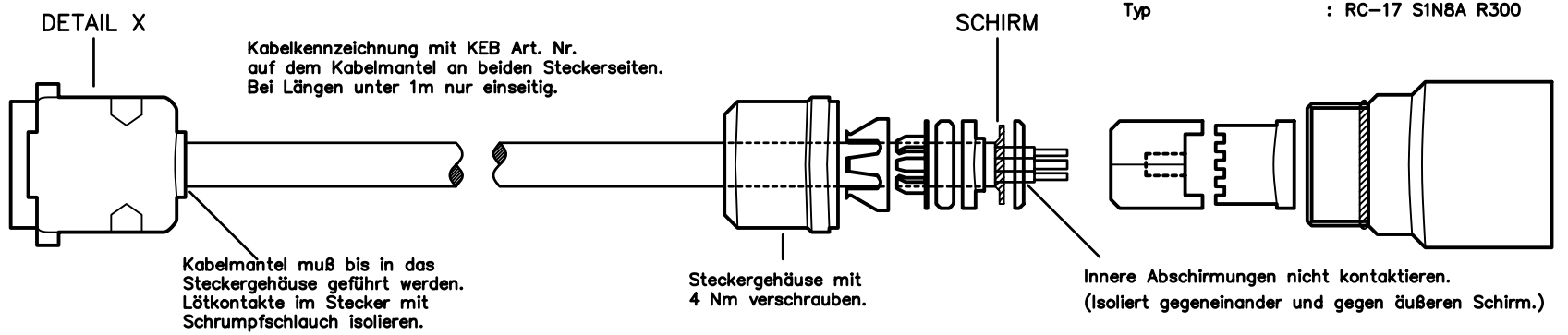

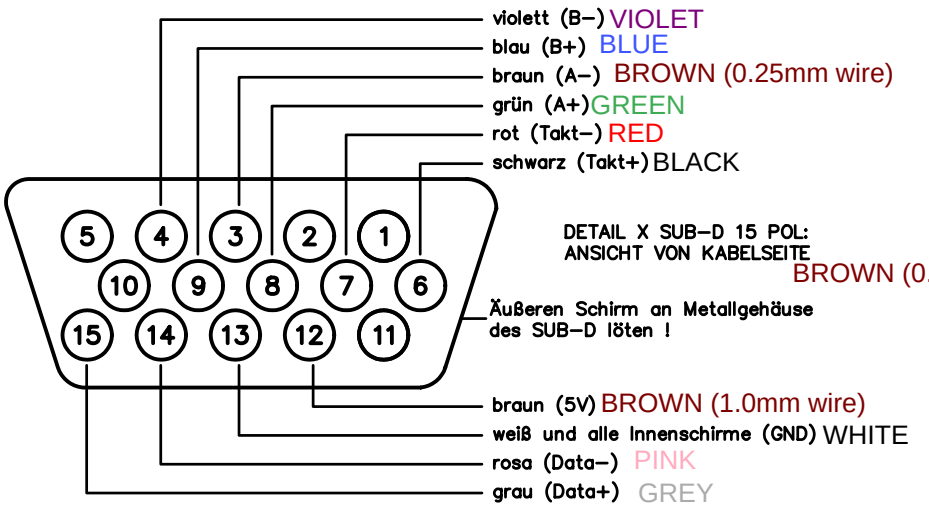

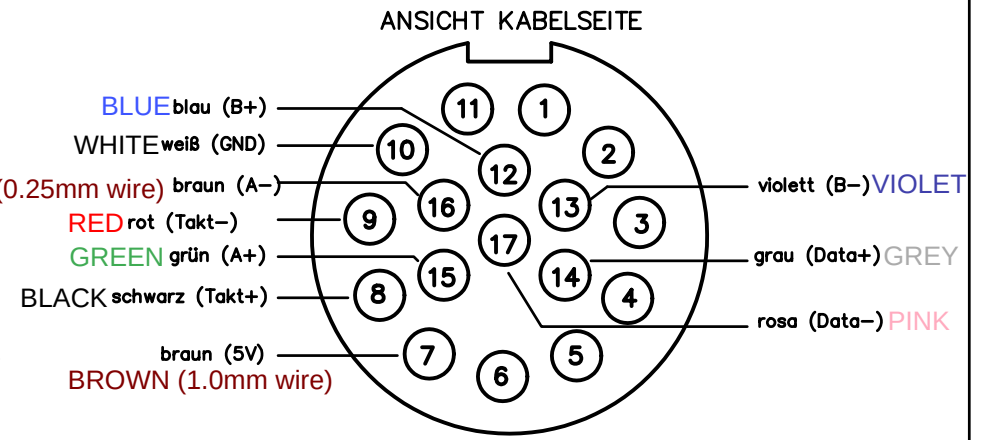

00.F5.0C1–LxPx KABELLAENGE x,x METER

00.F5.0C1–Lxxx KABELLAENGE xxx METER

Änderungen : /Modifications						
	g					
	f					
	e					
	d					
	c					
	b					
	a					
Nr.:		Datum	Name	Paßmaß Size of fit	Abmaß Deviation	

Rohmaß: /Rough size:	Ident–Nr.:	Menge: /Qty.:	ME	Werkstoff: /Material:	Rohteil–Nr.: /Blank–No.:

verzinkt, blau passiviert / zinc–plated, blue passivated / Schichtdicke: / Thickness of coat: úm

Schutzvermerk DIN 34 beachten / Observe protection note DIN 34

Allgemeintoleranz	Tolerierung	Oberflächenangaben	Werkstückkanten
DIN 6930–m general tolerance	ISO 8015 Tolerancing	DIN ISO 1302 Surface details	DIN 6784 Workpiece edges

Keine Maße aus der Zeichnung abnehmen/Do not scale

Alle MaBe in Millimeter/All dimensions in millimetres

Benennung: /Title

Geberkabel F5

Zeichnungs–Nr.: /Drawing No.:

00.F5.0C1–L005

	Datum	Name
gez.:	15.06.07	Horn
gepr.:		

Format Size | Maßstab Scale: 1:1

KEB ANTRIEBSTECHNIK Karl E. Brinkmann GmbH
D 32677 Barntrup

Kantenbruch/Break of sharp edges

x = Rz 100
y = Rz 25
z = Rz 6,3
w = geschliffen/ground Rz 4

Ohne unsere vorherige Zustimmung darf diese Zeichnung weder vervielfältigt, noch Dritten zugänglich gemacht werden, und sie darf durch Empfänger oder Dritte auch nicht in anderer Weise mißbräuchlich verwendet werden.

Auto – CAD

This drawing may not be duplicated nor retransmitted to others without our prior permission. Any improper use is forbidden.

Hollister-Whitney Elevator Corporation

#1 Hollister-Whitney Parkway
Quincy, IL 62305
Phone: 217-222-0466

Fax: 217-222-0493
e-mail: info@hollisterwhitney.com
www.hollisterwhitney.com

GERMAN	ENGLISH
ROT	RED
BLAU	BLUE
GELB	YELLOW
GRÜN	GREEN
VIOLETT	VIOLET
SCHWARZ	BLACK
BRAUN	BROWN
WEIβ	WHITE
ROSA	PINK
GRAU	GREY