Hydraulic Rope Gripper®

MODELS 620 AND 622 FOR SPREADS UP TO 6 1/2 IN. (165 MM)

The Rope Gripper is the industry's best way to prevent unintended cab movement. It is designed to prevent over-speeding and unintended movement should the doors remain open.

If either of those conditions occur, the Rope Gripper gently but firmly clamps the ropes to stop motion in a way that does not damage the rope or cause undue stress to the machine or sheaves. Protection is provided even during slipping traction.

The Rope Gripper is easily installed and aligned. Only four wires are needed to connect the Rope Gripper to the controller. The device is mechanically triggered and hydraulically reset.

A standard 27 in. hose is included. Hoses of up to 96 in. are in stock and longer lengths are available. An auxiliary interface panel (p/n FMG1) is available for legacy control systems.

When ordering, please specify:

- Capacity
- Maximum car speed
- Weight of
  - empty car
  - counterweight
  - traction rope weight
  - compensation rope weight
- Number, size and lay (regular or lang) of ropes
- Out-to-out spread of ropes
- Roping configuration (1:1 or 2:1)
- Hydraulic hose length

Specification	Model 620 1:1 roping	Model 620 2:1 Roping	Model 622 1:1 Roping	Model 622 2:1 roping
Out-to-out (max)	5 1/4 in. (124 mm)	5 1/4 in. (124 mm)	6 1/2 in. (165 mm)	6 1/2 in. (165 mm)
Power	6A, 120VAC, 1 PH, 60Hz for all units			
Contact ratings	6A, 250VAC, 0.15A, 250VDC for all units			
Closing time	0.3 seconds for all units			
Door zone (max)	± 3 in. (76.2 mm) / 6 in. (152 mm) total			
Rated speed (max)	350 ft/m (1.78 m/s)	250 ft/m (1.27 m/s)	600 ft/m (3.05 m/s)	400 ft/m (2.03 m/s)
Tripping speed	402 ft/m (2.04 m/s)	303 ft/m (1.54 m/s)	690 ft/m (3.51 m/s)	459 ft/m (2.33 m/s)
Car rated load (max)*	2,500 lbs (1,134 kg)	5,000 lbs (2,268 kg)	5,000 lbs (2,268 kg)	10,000 lbs (4,536 kg)
Car rated load (min)*	600 lbs (272 kg)	1,500 lbs (680 kg)	1,500 lbs (680 kg)	2,500 lbs (1,134 kg)
System mass (max)**	11,500 lbs (5,216 kg)	23,000 lbs (10,432 kg)	18,600 lbs (8,437 kg)	38,000 lbs (17,236 kg)
Car+Cwt.mass (min)	2,280 lbs (1,034 kg)	6,000 lbs (2,722 kg)	6,000 lbs (2,722 kg)	8,000 lbs (3,629 kg)
Shipping weight	100 lbs (45 kg)	100 lbs (45 kg)	180 lbs (82 kg)	180 lbs (82 kg)

*with 40 - 50% counterweight
**includes car, car load, counterweight, hoist and compensation rope mass

Model 620

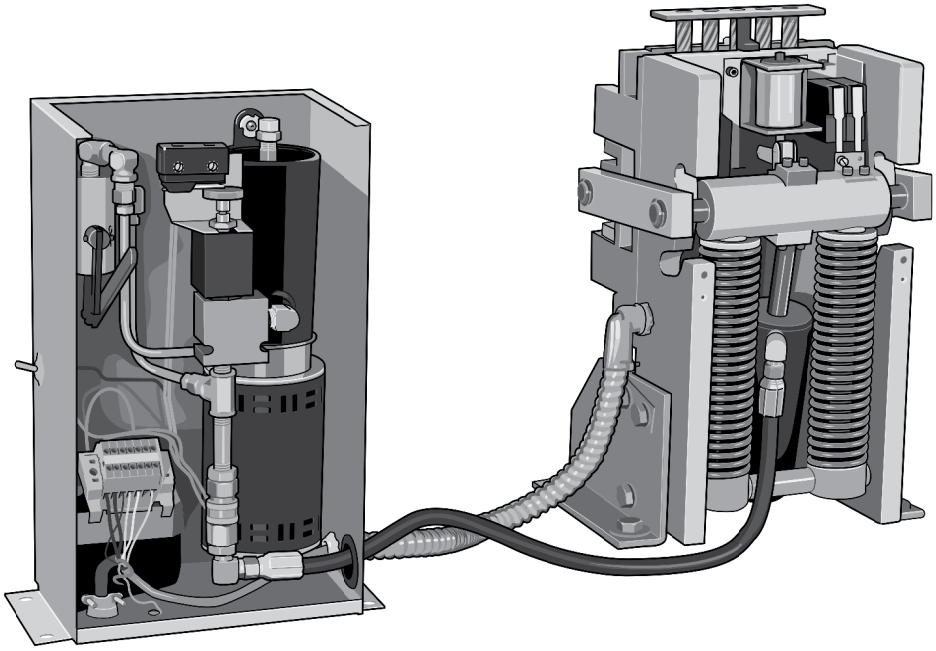

Hydraulic Rope Gripper®

MODELS 620 AND 622 FOR SPREADS UP TO 6 1/2 IN. (165 MM)

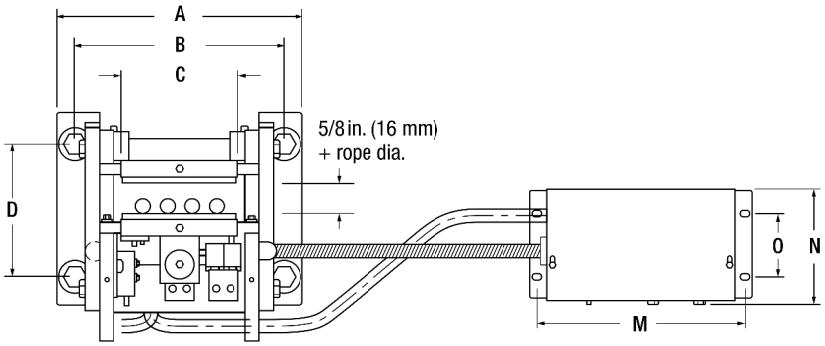

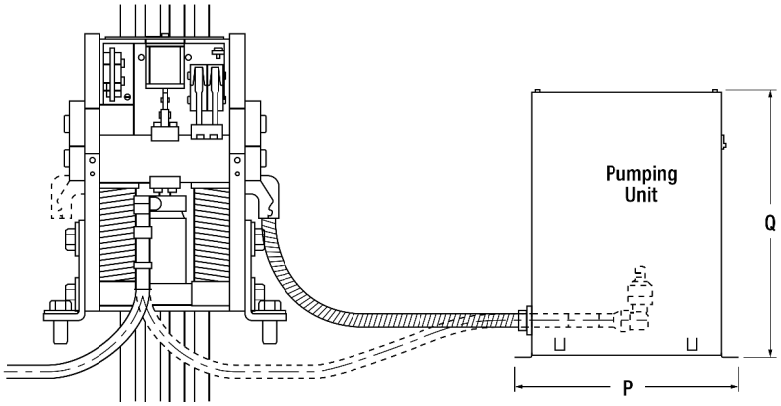

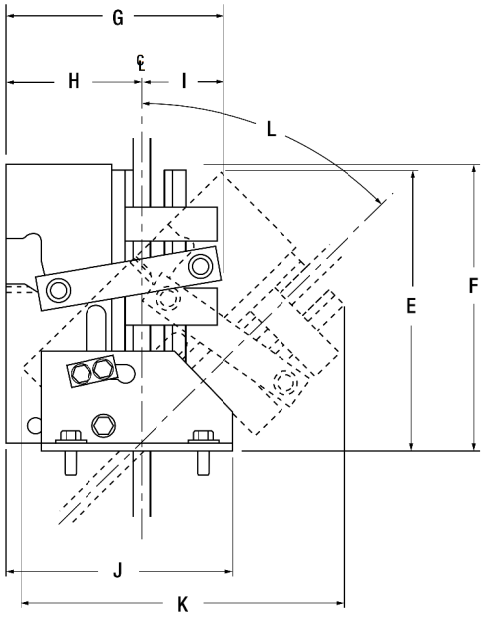

Model	Units	A	B	C**	D	E	F	G	H***	I***	J	K	L*	M	N	O	P	Q
620	inches*	10 1/8	8 5/8	4 7/8	5 1/2	11 11/16	12	9 1/4	5 3/4	3 1/2	9 1/2	13 1/2	45°	11 1/2	6 7/16	3 1/2	12 1/4	14 11/16
620	mm*	257	219	124	140	297	305	235	146	89	241	343	45°	292	164	89	311	373

*except for dimension L, which is degrees. Dimension L is also adjustable from 0° to the angle indicated.

**dimension C is also the maximum out-to-out spread of the ropes.

***dimensions H and I may vary with rope diameter

Hydraulic units can be mounted on either side of the Rope Gripper.

Four 1/2 in. bolts (minimum of Grade 5) are required to mount the Rope Gripper.

Four 1/4 in. bolts are recommended to mount the hydraulic unit to the work surface.